Ventilation

Centrifugal Ventilating Fans

- REH Series – Single Inlet Single Width
- RZH Series – Double Inlet Double Width

TLT-Turbo GmbH

TLT-Turbo GmbH
Am Weinberg 68 · D-36251 Bad Hersfeld/Germany
Tel.: +49.6621.950-0 · Fax: +49.6621.950-100

CENTRIFUGAL VENTILATING FANS
TABLE OF CONTENTS

TLT series production plant at Bad Hersfeld, Germany

Our Bad Hersfeld facility has a history going back to 1874, when Benno Schilde and August Büttner founded their factories here.

The "exhausters" traditionally made of cast iron could be built much lighter and cheaper through the use of steel sheet.

At Büttner the focus was initially on blowers for tubular boilers and dryers, then shifted to heavy-duty industrial fans as required specifically in power plant de-dusting applications. Schilde, meanwhile, stepped up its research and development of light-duty ventilating fans and medium-duty industrial blowers. Numerous patents and registered designs testify to a steady flow of engineering breakthroughs. With the erection of its series production facility at Bad Hersfeld, dedicated mainly to the cost-effective production of roof fans, the Babcock-BSH Group gained a leading market position both in Germany and abroad. The Turbo-Lufttechnik GmbH (TLT) – Bad Hersfeld site - was newly established in June 1995, now integrating Babcock-BSH's Air and Thermal Engineering division.

The “TLT-Turbo GmbH”, newly established in March 2003 as a company in their own rights, belongs to AG Kühnle, Kopp & Kausch, Frankenthal.

TLT now is one of the world’s leading fan manufacturers and our competence is expressed in mature and very economical products. Our two R&D centres at Zweibrücken and Bad Hersfeld guarantee a continuing process of always adapting all TLT products to the latest demands of the market.

Contents **Page**

Product range – Overview	003
Types - Overview	004 - 005
Technical notes	006
Accessories	007
Test rig description	008
Acoustic data	009 - 011
REH Series dimensions	012 - 022
Ordering code	023
Selection example	025
REH Series characteristics	026 - 038
REH Series tender texts	039 - 043
RZH Series dimensions	044 - 050
RZH Series characteristics	051 - 063
RZH series tender texts	064 - 066
Examples from our product range	067

TLT-Turbo GmbH
Am Weinberg 68 · D-36251 Bad Hersfeld / Germany
Tel.: +49.6621.950-0 · Fax: +49.6621.950-100

CENTRIFUGAL VENTILATING FANS
REH /RZH SERIES
PRODUCT RANGE – OVERVIEW
TECHNICAL NOTES

Product series, sizes, performances, designs

REH Series (Single Inlet Single Width type)
- 13 sizes
  - Impeller diameters from 400 – 1600 mm
- Volume flow: up to about 125 000 m³/h
- Overall pressure increase: up to about 3500 Pa
- 2 available designs:
  - R type with baseframe, ready for motor and belt drive installation
  - M type with motor pedestal for direct impeller installation on the motor shaft end

RZH Series (Double Inlet Double Width type)
- 13 design sizes
  - Impeller diameters from 400 – 1600 mm
- Volume flow: up to about 250000 m³/h
- Overall pressure increase: up to about 3500 Pa
- 2 available designs
  - R type with baseframe, ready for motor and belt drive installation
  - E type for integration into equipment

Impeller

- High-performance sheet steel impeller with backward curved blades, robot-welded to minimize stress, for Tip speeds up to 80 m/s. Surface finish: polyester powder coating (sizes up to 1120), two-component synthetic paint (size 1250 and above), colour: RAL 7030 (stone grey).
- Aerodynamically optimized bell mouth
- Measured maximum efficiency: 86%
- Consistent impeller precision ensured by welding robots
- Impellers are fitted with grey cast iron screw-down hubs with taperlock bushes, size 1120 and above come with weld-in steel hubs
- Impeller, hub and shaft are balanced together for improved balance quality (Q = 2.5) as per VDI 2060
- Impeller shaft protected with Tectyl coating

Casing

- Four available casing positions (0º, 90º, 180º, 360º)
- Welded casing construction ❸
- Outlet flange dimensions as per DIN 24193, series 2
- Surface protected by 1-component synthetic paint, colour: RAL 7030 (stone grey)
- For air temperatures between -20ºC and +80ºC, depending on motor insulation class (higher temperature ratings available on request)

Drive layout

- The standard configuration is AL (left-hand drive) or AR (right-hand drive) (both as viewed from drive side). AM types (centrally driven) are available on request.

Bearing assembly

- Fans from either series are available with two alternative bearing configurations:
  - Deep-groove ball bearing (re-greasable), non-split RASE type r = light-duty version ❾
  - Self-aligning ball or roller bearing (re-greasable when stationary, or in service via a suitable greasing system), supported in a split cast-iron pillow ❽ = heavy-duty bearing
  - Both types are mounted on a sturdy bearing pedestal

TLT-Turbo GmbH
Am Weinberg 68 · D-36251 Bad Hersfeld / Germany
Tel.: +49.6621.950-0 · Fax: +49.6621.950-100

CENTRIFUGAL VENTILATING FANS REH SERIES – SINGLE INLET SINGLE WIDTH DESIGNS – OVERVIEW

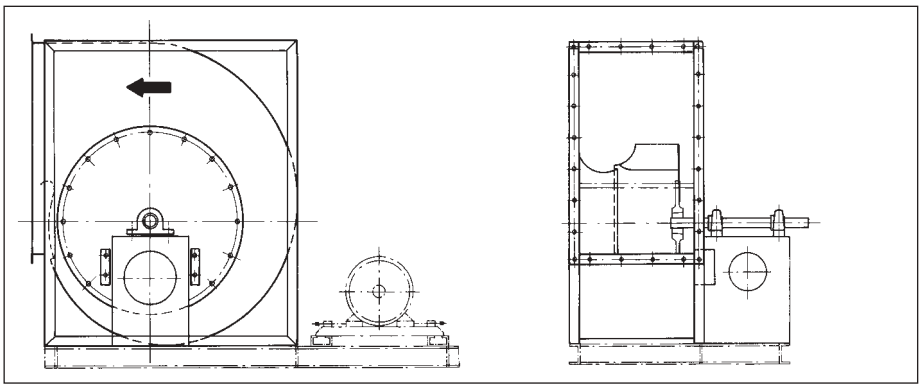

Type R

Sizes 400 – 630

with bearing assembly ❾

Deep-groove ball bearing (re-greasable), non-split RASE type, maintenance-free low-noise design, rated for a calculated service life of approx. 20,000 operating hours, mounted on a sturdy bearing pedestal.

or with heavy-duty bearing ❽

Re-greasable self-aligning ball or roller bearing (re-greasable when stationary, or in service via a suitable lubricating line), supported in a split cast-iron pillow block, rated for a calculated service life of approx. 30,000 operating hours, mounted on a sturdy bearing pedestal.
Complete with baseframe made of torsion-resistant sectional steel, ready to accommodate the motor and belt-tensioning system.

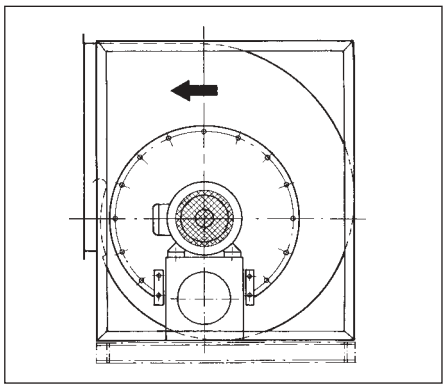

Type M

Sizes 400 – 630

Impeller mounted directly on the motor shaft end.
Up to motor size 200.

Baseframe dimensions available on request.

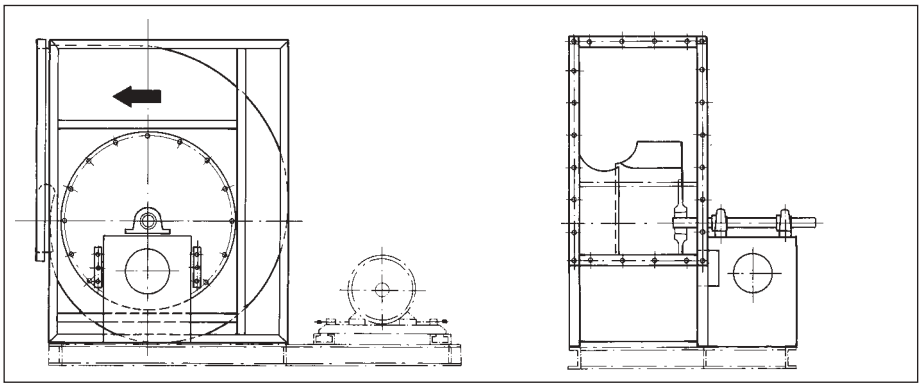

Type R

Sizes 710 – 1000

with bearing assembly ❾

Deep-groove ball bearing (re-greasable), non-split RASE type, maintenance-free low-noise design, rated for a calculated service life of approx. 20,000 operating hours, mounted on a sturdy bearing pedestal.

or with heavy-duty bearing ❽

Re-greasable self-aligning ball or roller bearing (re-greasable when stationary, or in service via a suitable lubricating line), supported in a split cast-iron pillow block, rated for a calculated service life of approx. 30,000 operating hours, mounted on a sturdy bearing pedestal.
Complete with baseframe made of torsion-resistant sectional steel, ready to accommodate the motor and belt-tensioning system.

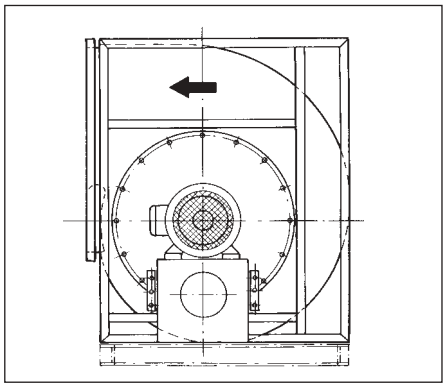

Type M

Sizes 710 – 1000

Impeller mounted directly on the motor shaft end.
Up to motor size 225.

Baseframe dimensions available on request.

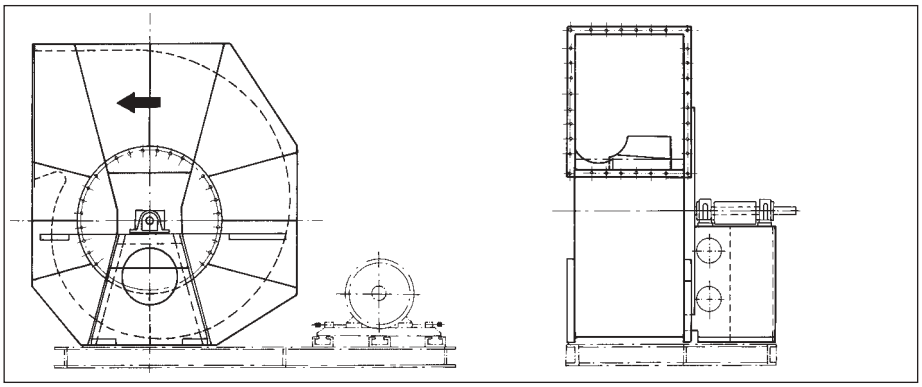

Type R

Sizes 1120 – 1600

with bearing assembly ❽

Re-greasable self-aligning ball or roller bearing (re-greasable when stationary, or in service via a suitable lubricating line), supported in a split cast-iron pillow block, rated for a calculated service life of approx. 30,000 operating hours, mounted on a sturdy bearing pedestal.

Complete with baseframe made of torsion-resistant sectional steel, ready to accommodate the motor and belt-tensioning system.

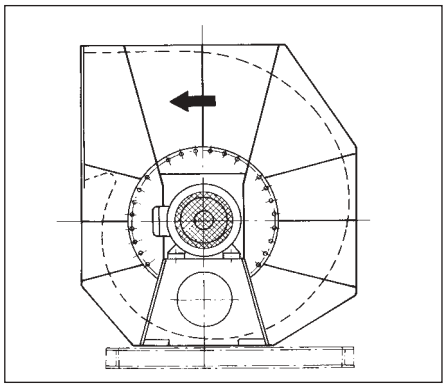

Type M

Sizes 1120 – 1600

Impeller mounted directly on the motor shaft end.
Up to motor size 315.

Baseframe dimensions available on request.

TLT-Turbo GmbH
Am Weinberg 68 · D-36251 Bad Hersfeld / Germany
Tel.: +49.6621.950-0 · Fax: +49.6621.950-100

CENTRIFUGAL VENTILATING FANS RZH SERIES – DOUBLE INLET DOUBLE WIDTH DESIGNS – OVERVIEW

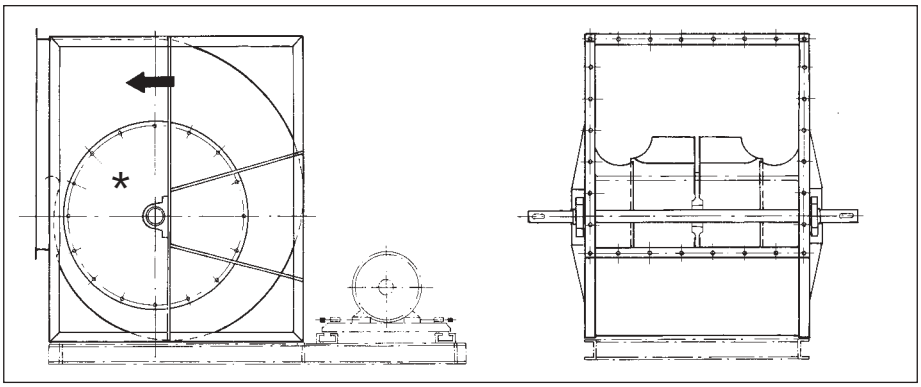

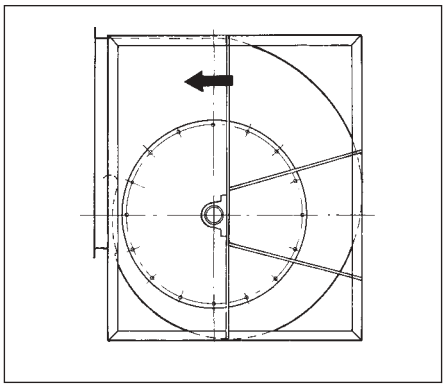

Type R
Sizes 400 – 630
with bearing assembly ❾
Deep-groove ball bearing (re-greasable), non-split RASE type, maintenance-free low-noise design, rated for a calculated service life of approx. 20,000 operating hours, mounted on a sturdy bearing pedestal.

or with heavy-duty bearing ❽
Re-greasable self-aligning ball or roller bearing (re-greasable when stationary, or in service via a suitable lubricating line), supported in a split cast-iron pillow block, rated for a calculated service life of approx. 30,000 operating hours, mounted on a sturdy bearing pedestal.
Complete with baseframe made of torsion-resistant sectional steel, ready to accommodate the motor and belt-tensioning system.

Type E
Sizes 400 – 630
For integration into equipment.
Refer to Type R for a technical description of the bearing assembly.

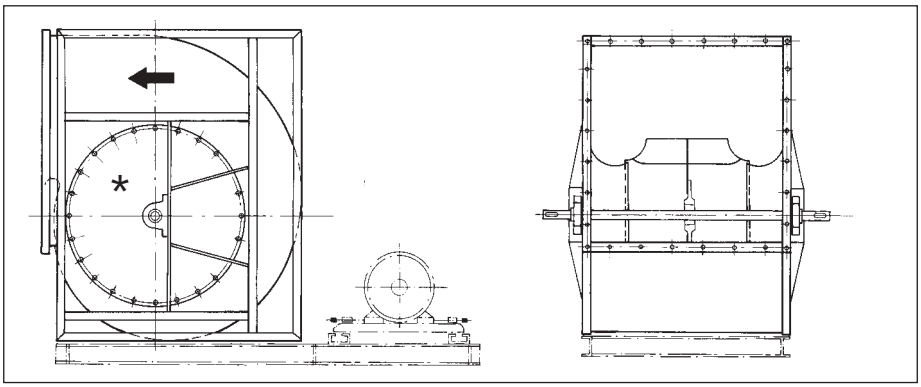

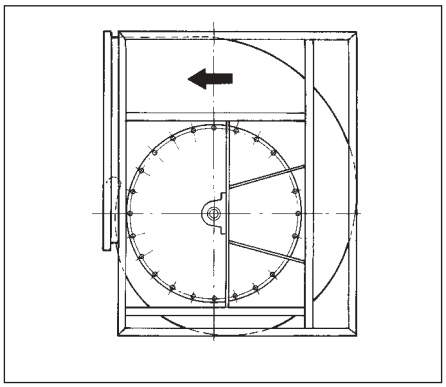

Type R
Sizes 710 – 1000
with bearing assembly ❾
Deep-groove ball bearing (re-greasable), non-split RASE type, maintenance-free low-noise design, rated for a calculated service life of approx. 20,000 operating hours, mounted on a sturdy bearing pedestal.

or with heavy-duty bearing ❽
Re-greasable self-aligning ball or roller bearing (re-greasable when stationary, or in service via a suitable lubricating line), supported in a split cast-iron pillow block, rated for a calculated service life of approx. 30,000 operating hours, mounted on a sturdy bearing pedestal.
Complete with baseframe made of torsion-resistant sectional steel, ready to accommodate the motor and belt-tensioning system.

Type E
Sizes 710 – 1000
For integration into equipment.
Refer to Type R for a technical description of the bearing assembly.

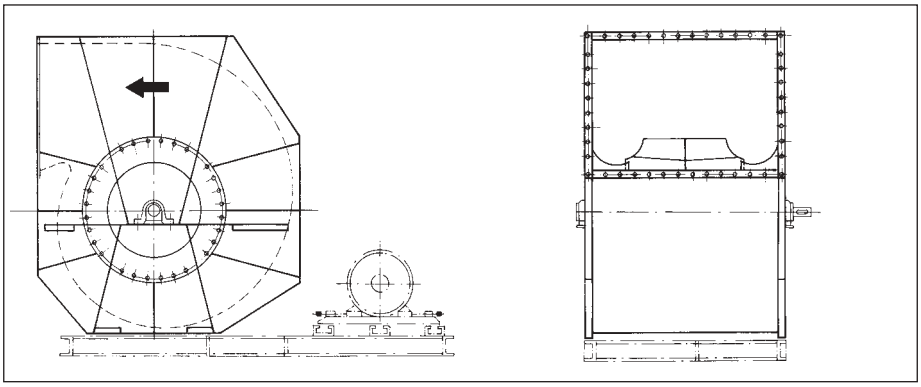

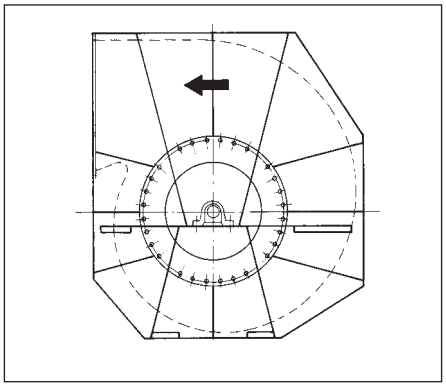

Type R
Sizes 1120 – 1600
with bearing assembly ❽
Re-greasable self-aligning ball or roller bearing (re-greasable when stationary, or in service via a suitable lubricating line), supported in a split cast-iron pillow block, rated for a calculated service life of approx. 30,000 operating hours, mounted on a sturdy bearing pedestal.

Complete with baseframe made of torsion-resistant sectional steel, ready to accommodate the motor and belt-tensioning system.

Type E
Sizes 1120 – 1600
For integration into equipment.
Refer to Type R for a technical description of the bearing assembly.

* The drawing shows the type ❾ bearing configuration. Type ❽ bearings are always mounted horizontally, regardless of the casing position.

TLT-Turbo GmbH
Am Weinberg 68 · D-36251 Bad Hersfeld / Germany
Tel.: +49.6621.950-0 · Fax: +49.6621.950-100

Casing position, direction of rotation

RD 0° / RD 90° / RD 180° / RD 270°
LG 0° / LG 90° / LG 180° / LG 270°
(viewed from drive side)

Calculation of recommended motor output:

$$P_M = P_W \times 1{,}2^* = \quad [kW]$$

P_W = Shaft output
P_M = Motor output rating

$$P_W = \frac{V\,[m^3/h] \cdot \Delta pt\,[Pa]}{\eta \cdot 1000 \cdot 3600} = [kW]$$

* Allowance for losses in belt drive, etc.

Calculation of the acceleration time:

$$ta = 8\,\frac{J \cdot n^2}{P_M}\,10^{-6} = \quad [s]$$

ta = acceleration time in s
J = moment of inertia in kgm^2
n = fan speed in rpm
P_M = motor output rating in kW

If the acceleration time ta thus obtained exceeds the maximum acceleration time given by the motor manufacturer, or if the motor protection switch is tripped within that interval, a larger motor (or heavy-duty motor protection switch) must be used.

Shaft finish:

Ground shaft seats for bearings and pulleys are standard on all shafts. Shaft ends have DIN 331 centering holes and parallel keys as per DIN 6885, sheet 1.

All shafts come with a protective Tectyl coating.

Output limits for direct-start type motors:

Motor size	Light-duty bearing ❾		Heavy-duty bearing ❽	
	REH	RZH	REH	RZH
400 - 500	4,0 kW	4,0 kW	5,5 kW	5,5 kW
560 - 630	4,0 kW	4,0 kW	5,5 kW	7,5 kW
710 - 800	5,5 kW	5,5 kW	7,5 kW	11 kW
900 - 1000	5,5 kW	5,5 kW	11 kW	15 kW
1120 - 1600	-	-	15 kW	18,5 kW

Explosion protection:

Fans designed for use in potentially explosive atmospheres must comply with the Ex-RL guidelines of the Association of Chemical Industry Workmen's Compensation Insurers or VEURA Standard Sheet 24 169, Part 1 "Design-related explosion protection measures for fans".

Environments subject to explosion hazards are classified into zones as follows:

Zone	Explosion hazard	Ignition sources to be prevented
0	continuous or long-term	even in the case of malfunctions expected to occur only rarely
1	occasional	also in the case of malfunctions expected to occur rather more frequently.
2	rare or short-term	during normal operation

When determing the applicable zone, the fan operating location and the potentially hazardous atmosphere conveyed must be considered separately. Fans operated in type 1 and 2 zones do not require approval or inspection by the Federal PTB Institute (Physikalisch-Technische Bundesanstalt) in Germany.

The liability for compliance with applicable guidelines rests with manufacturers, suppliers and operators.

Ignition sources to be considered in the operation of standard fans include the following:

- hot surfaces, e.g. due to bearing friction or impeller blocking
- sparks due to abrasion, friction or impact (e.g., impeller rubbing)
- sparks due to static discharge from electrically non-conducting components (e.g., plastics or heavily paint-coated surfaces)

REH/RHZ fans are used to convey potentially explosive atmospheres

– qualifying as zone 1 or 2, or when fitted in zone 1 or zone 2 environments

– qualifying as zone 1 or 2 when fitted in non-hazardous areas in the T1 – T3 temperature range

provided that

- the maximum permissible rpm are reduced by 20%
- the permissible shaft output PW is reduced by 30%
- a horizontal shaft arrangement is adopted
- fans are protected against an Inlet of foreign objects (solid matter drawn or falling into the fan)

Note concerning speed-controlled fans:

With speed-controlled fans, there is always a risk of the unit being operated in an rpm range where unacceptable vibrations occur.

The use of a continuous-type automatic vibration monitoring system interlocked with the speed controller therefore is urgently recommended.

As a minimum solution, a vibration measurement may be carried out on the fully installed fan when it is first started up under operating conditions.

Since the specific hazardous rpm ranges will depend on various factors such as mounting location, fastening system, and Inlet/discharge conditions, such measurements can only be carried out following on-site installation.

Our specialized engineers can perform such measurements using advanced equipment and technology.

TLT-Turbo GmbH
Am Weinberg 68 · D-36251 Bad Hersfeld / Germany
Tel.: +49.6621.950-0 · Fax: +49.6621.950-100

CENTRIFUGAL VENTILATING FANS REH / RZH SERIES ACCESSORIES

Inspection hatch
Available in two types, arranged according to the casing position.

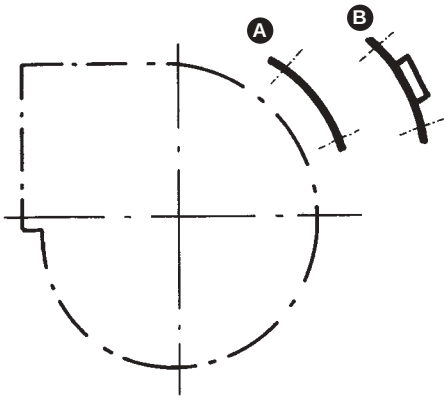

The inspection hatch complies with Accident Prevention Regulations. It can only be opened with tools.

The hatch location is independent of the casing position.

- **A** Standard type, secured with self-tapping screws
- **B** Industrial type with handle, secured via weld-on nuts and hexagonal head bolts.

Drain
(Casing position to be specified in purchase order).
Up to size 1000:
R 1/2“ threaded drain
Size 1120 and above:
R 1" threaded drain
Fitted at lowest point of casing.

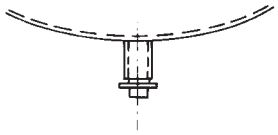

Inlet guard
Split design

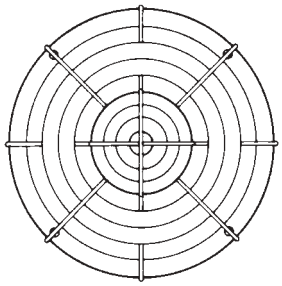

Belt guard (Mesh dimensions as per DIN 31001, Part 1)

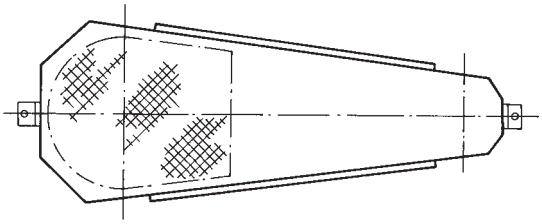

- split design available upon request

Belt drive The complete belt drive system consists of the following parts:

2 pulleys as per DIN 2211

1 high-performance narrow-type V-belt set as per DIN 7753

Shaft guard
For the outer (REH fans) or free (RZH fans) shaft end.

REH

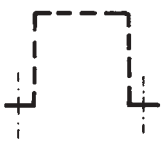

RZH

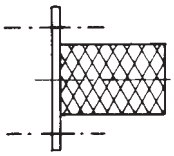

Antivibration mounts

Rubber damper

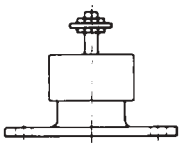

Spring isolator

Number and sizes proposed upon enquiry.

Thermal and noise insulation of centrifugal fans (REH series only)

- Mineral wool sheets, stitched onto galvanized wire mesh (one side only) with galvanized wire, thickness as required
- Rigid support structure, 120 mm shell spacing
- Outer sheathing made of smooth sheet steel (1.0 mm), galvanized on both sides. For outdoor duty, aluminium sheet is used.
- A horizontal parting line is provided for maintenance. Joints are designed to facilitate installation.
- Technical details analogous to DIN 18421
- Attenuation: _____ dB (please specify)

Thermal and noise insulation for centrifugal fans (protective hood type) (REH series only)

- Mineral wood sheets comprising black 80 mm non-woven glass fiber matting (on one side)
- Inside cover made of 1 mm perforated sheet steel
- Outer sheathing made of 1 mm sheet steel, galvanized on both sides
- Individual elements joined by rapid-action fasteners for maximum ease of assembly
- Technical details analogous to DIN 18421
- Attenuation: _____ dB (please specify)

TLT-Turbo GmbH
Am Weinberg 68 · D-36251 Bad Hersfeld / Germany
Tel.: +49.6621.950-0 · Fax: +49.6621.950-100

CENTRIFUGAL VENTILATING FANS TEST RIG DESCRIPTION IN-HOUSE RESEARCH FOR RELIABLE PERFORMANCE

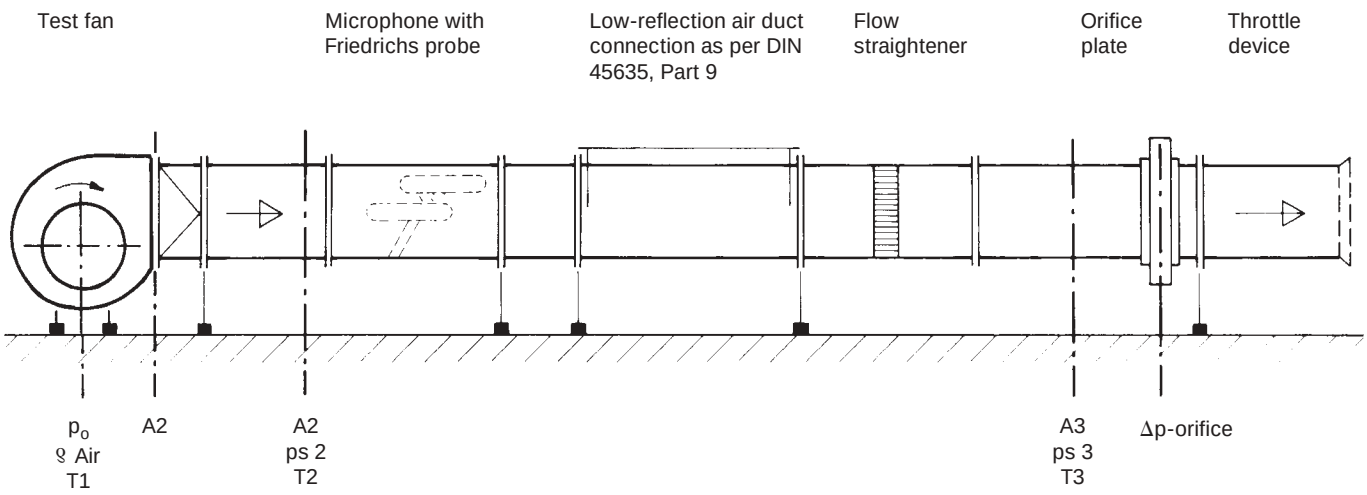

The TLT measuring rig for centrifugal fans

The airway configuration complies with DIN 24163, Part 2, for the flow rate and pressure measurements and DIN 45 635, Part 9, for acoustic measurements.

Our standard test rig determines the characteristic pressure/flow curve of each centrifugal ventilating fan via outlet-side throttling of the airflow at the distance specified in the standards. The discharge impact loss occurring at the transition point between the actual fan outlet and the maximum airway cross-section is therefore reflected in the characteristics curve.

The dynamic pressure Pd contained in Pa, which is plotted as an abscissa in the characteristic curve, is stated for the duct cross-section corresponding to the fan connecting flange dimensions. With fans discharging directly into the mixing chamber of a central unit (or any other large enclosure), for instance, the actual dynamic fan discharge pressure must be used in the resistance analysis. This pressure is about twice as high as that given in the characteristic curves.

The pressure/flow characteristics include the bearing obstruction effect. However, they do not account for the effects of V-belt pulleys, belt guards, Inlet guard grating, or on-site environment conditions.

All efficiency values were determined at a medium rpm level.

The efficiencies shown in the characteristic curve plots take into account the effects of the Reynolds number. As a result, efficiencies tend to be slightly superior in the upper range while dropping somewhat in the lower range.

TLT-Turbo GmbH
Am Weinberg 68 · D-36251 Bad Hersfeld / Germany
Tel.: +49.6621.950-0 · Fax: +49.6621.950-100

CENTRIFUGAL VENTILATING FANS
REH / RHZ SERIES
ACOUSTIC DATA

1. Sound level

The total acoustic power level LWvent (in dB) of each centrifugal fan can be obtained for each operating point directly from the characteristic data sheets.

Starting from this value, the A-weighted acoustic power level L_{WA} and the relative acoustic power level L_{Wrel} can be determined using the table across. These values are available as the acoustic power emitted into the duct and as the acoustic power emitted from the fan's inlet or outlet opening.

In addition, it is possible to determine the linear A-weighted and relative sound pressure levels as emitted from the outlet opening of the fan.

2. Acoustic power level emitted into the duct

The level of acoustic power emitted by a centrifugal fan into the duct is used for calculating the sound power characteristics of downstream systems, e.g., silencers.

The levels are calculated as follows:

L_{Wvent} [dB] = total acoustic power emitted by the fan, determined from the respective characteristic curve sheet

L_{WAvent} [dB] = A-weighted acoustic power level, according to the equation

$$L_{WA\ Vent.} = L_{W\ Vent.} - \text{portion 1.1 [dB]}$$

The value of the portion 1.1 is given in the table across.

$L_{Wrelvent}$ [dB] = relative acoustic power level as expressed by the equation

$$L_{WA\ rel.\ Vent.} = L_{W\ Vent.} - \text{portion 1.2 [dB]}$$

Fan size	Speed Rpm	Portion 1.1	Portion 1.2 at an octave center frequency of [Hz] 63	125	250	500	1000	2000	4000	8000
400	1250	11	5	8	4	11	20	25	30	35
	1600	9	5	8	4	12	16	23	28	33
	2000	7	6	8	4	11	14	20	25	30
	2500	6	6	8	11	4	11	18	23	28
	3150	5	6	8	11	4	11	14	20	25
450	1120	12	5	3	9	14	20	25	30	35
	1400	10	5	8	4	11	18	23	28	33
	1800	8	5	8	4	11	14	20	25	30
	2240	7	6	8	4	11	13	18	23	28
	2800	5	6	9	11	4	10	15	20	25
500	1000	12	5	3	9	14	20	25	30	35
	1250	10	5	8	4	11	18	23	28	33
	1600	8	5	8	4	11	14	20	25	30
	2000	7	6	8	4	11	13	18	23	28
	2500	5	6	8	11	4	10	15	20	25
560	900	12	5	3	10	14	20	25	30	35
	1120	11	5	3	9	13	18	22	27	33
	1400	9	5	8	4	11	16	20	25	30
	1800	7	6	8	4	11	13	18	23	28
	2240	6	6	8	4	11	12	15	20	25
630	800	12	5	3	10	14	20	25	30	35
	1000	11	5	3	9	13	18	22	27	33
	1250	9	5	8	4	11	16	20	25	30
	1600	7	6	8	4	11	13	18	23	28
	2000	6	6	8	4	11	12	15	20	25
710	710	13	5	3	10	16	20	25	30	35
	900	11	5	3	10	13	18	22	27	33
	1120	10	5	3	9	12	16	20	25	30
	1400	8	6	8	4	10	14	18	22	28
	1800	7	6	8	4	11	12	15	20	25
800	630	13	5	3	10	16	20	25	30	35
	800	11	5	3	10	13	18	22	27	33
	1000	10	5	3	9	12	16	20	25	30
	1250	8	6	8	4	10	14	18	22	28
	1600	7	6	8	4	11	12	15	20	25
900	560	13	2	7	11	16	20	24	30	35
	710	12	5	3	10	14	17	22	27	32
	900	10	5	3	10	13	15	20	25	30
	1120	9	5	3	10	12	14	18	22	28
	1400	7	6	8	4	11	12	15	20	25
1000	500	13	2	7	11	16	20	24	30	35
	630	12	5	3	10	14	17	22	27	32
	800	10	5	3	10	13	15	20	25	30
	1000	9	5	3	10	12	14	18	22	28
	1250	7	6	8	4	11	12	15	20	25
1120	450	12	1	9	12	14	16	21	26	31
	560	10	2	9	12	13	14	19	24	29
	710	8	10	2	10	13	13	16	21	26
	900	7	10	2	10	12	11	14	19	24
	1120	6	10	2	11	12	11	12	16	21
1250	400	12	1	9	12	14	16	21	26	31
	500	10	2	9	12	13	14	19	24	29
	630	9	2	9	12	13	13	16	21	26
	800	7	10	2	10	13	11	14	19	24
	1000	6	10	2	11	13	11	12	16	21
1400	355	12	1	9	12	14	16	21	26	31
	450	10	2	9	12	13	14	19	24	29
	560	9	2	9	12	13	13	16	21	26
	710	7	10	2	10	13	11	14	19	24
	900	6	10	2	11	13	11	12	16	21
1600	315	7	4	6	8	9	12	17	22	27
	400	10	2	9	12	13	14	18	23	29
	500	9	2	9	13	13	12	16	21	26
	630	7	2	10	13	13	11	14	19	24
	800	6	10	2	10	14	11	12	16	21

TLT-Turbo GmbH
Am Weinberg 68 · D-36251 Bad Hersfeld / Germany
Tel.: +49.6621.950-0 · Fax: +49.6621.950-100

3. Acoustic power levels emitted from the fan inlet or outlet opening

To determine the sound levels at a given installation site, it is usually necessary to know the level of acoustic power emitted from the fan's inlet or outlet opening. The following tables are based on the discharge reflection pattern assumed in VDI 2081, Case 2.

The levels are calculated as follows:

$L_{W\ Vent.}$ [dB] =
total acoustic power emitted by the fan, determined from the respective characteristic curve sheet

$L_{WA\ outl.}$ [dB] =
A-weighted level of acoustic power emitted into the room from the fan's outlet opening, expressed by the equation

$L_{WA\ outl.} = L_{W\ Vent.}$ – portion 2.1 [dB]

The value of the portion 2.1 is given in the table across.

$L_{Wrel\ outl.}$ [dB] =

relative level of acoustic power emitted into the room from the fan's outlet opening, expressed by the equation

$L_{W\ rel.\ outl.} = L_{W\ Vent.}$ – portion 2.2 [dB]

The value of the portion 2.2 is given in the table across.

$LW_{\ outl.}$ [dB] =

unweighted (linear) level of acoustic power emitted from the opening, following the equation

$L_{W\ outl.} = L_{W\ Vent.}$ – portion 2.3 [dB]

Fan size	Speed rpm	Portion 2.1	Portion 2.2 at an octave center frequency of [Hz] 63	125	250	500	1000	2000	4000	8000	Portion 2.3
400	1250	12	18	15	7	12	20	25	30	35	5
	1600	10	18	15	6	12	16	23	28	33	4
	2000	8	18	15	6	11	14	20	25	30	3
	2500	6	19	15	13	5	11	18	23	28	3
	3150	5	19	15	13	5	11	14	20	25	2
450	1120	13	17	8	11	15	20	25	30	35	5
	1400	11	17	14	7	11	18	23	28	33	4
	1800	9	17	14	6	11	14	20	25	30	3
	2240	7	18	14	5	11	13	18	23	28	3
	2800	6	18	14	13	5	10	15	20	25	2
500	1000	13	16	7	11	15	20	25	30	35	4
	1250	11	16	13	6	11	18	23	28	33	4
	1600	9	16	13	5	11	14	20	25	30	3
	2000	7	17	13	5	11	13	18	23	28	3
	2500	6	17	14	12	5	10	15	20	25	2
560	900	13	15	7	11	14	20	25	30	35	5
	1120	11	15	7	10	13	18	22	27	33	4
	1400	10	15	12	6	11	16	20	25	30	3
	1800	8	16	13	5	11	13	18	23	28	3
	2240	6	16	13	5	11	12	15	20	25	2
630	800	13	14	7	11	14	20	25	30	35	4
	1000	11	14	6	10	13	18	22	27	33	3
	1250	9	14	12	5	11	16	20	25	30	3
	1600	8	15	12	5	11	13	18	23	28	2
	2000	6	15	12	5	11	12	15	20	25	2
710	710	14	13	7	10	16	20	25	30	35	4
	900	12	13	6	10	13	18	22	27	33	3
	1120	10	13	6	10	12	16	20	25	30	3
	1400	8	13	11	5	10	14	18	22	28	2
	1800	7	14	11	5	11	12	15	20	25	2
800	630	13	12	6	10	16	20	25	30	35	4
	800	12	12	6	10	13	18	22	27	33	3
	1000	10	12	5	8	12	16	20	25	30	2
	1250	8	13	11	5	10	14	18	22	28	2
	1600	7	13	11	4	11	12	15	20	25	2
900	560	14	7	9	11	16	20	24	30	35	4
	710	12	11	6	10	14	17	22	27	32	3
	900	10	11	5	10	13	15	20	25	30	2
	1120	9	12	5	10	12	14	18	22	28	2
	1400	7	12	10	5	11	12	15	20	25	2
1000	500	14	6	9	11	16	20	24	30	35	3
	630	12	10	5	10	14	17	22	27	32	3
	800	10	10	5	10	13	15	20	25	30	2
	1000	9	11	4	10	12	14	18	22	28	2
	1250	7	11	10	4	11	12	15	20	25	1
1120	450	12	4	10	12	14	16	21	26	31	2
	560	10	4	10	12	13	14	19	24	29	2
	710	9	13	3	10	13	13	16	21	26	1
	900	7	13	3	10	12	11	14	19	24	1
	1120	6	13	3	11	12	21	12	16	21	–
1250	400	12	5	10	12	14	16	21	26	31	2
	500	10	4	10	12	13	14	19	24	29	2
	630	9	3	10	12	13	13	16	21	26	1
	800	7	12	3	10	13	11	14	19	24	1
	1000	6	13	3	11	13	11	12	16	21	–
1400	355	12	4	10	12	14	16	21	26	31	2
	450	10	4	10	12	13	14	19	24	29	2
	560	9	3	10	12	13	13	16	21	26	1
	710	7	12	3	10	13	11	14	19	24	1
	900	6	12	3	11	13	11	12	16	21	–
1600	315	7	6	7	8	9	12	17	22	27	1
	400	10	4	10	12	13	14	18	23	29	2
	500	9	3	10	13	13	12	16	21	26	1
	630	7	3	10	13	13	11	14	19	24	1
	800	6	12	3	10	14	11	12	16	21	–

TLT-Turbo GmbH
Am Weinberg 68 · D-36251 Bad Hersfeld / Germany
Tel.: +49.6621.950-0 · Fax: +49.6621.950-100

4. Sound pressure levels emitted from the fan inlet or outlet opening

The basic assumptions for the sound pressure level are a measuring distance of 1 m from the fan opening (at a 45° angle), a room with an acoustic absorption surface of 50 m_ sabin, and an external sound input of 0 dB. Taking LWvent from the characteristic curve sheets, sound pressure levels can be determined as follows

$L_{p\ A\ outl.}$ [dB] =

A-weighted sound pressure level emitted from the fan opening, according to the equation

$L_{p\ A\ outl.} = L_{W\ Vent.}$ – portion 3.1 [dB]

$L_{prel\ outl.}$ [dB] =

relative sound pressure level emitted from the fan opening, according to the equation

$L_{p\ rel.\ outl.} = L_{W\ Vent.}$ – portion 3.2 [dB]

$L_{p\ outl.}$ [dB] =

unweighted linear sound pressure level according to the equation

$L_{p\ outl.} = L_{W\ Vent.}$ – portion 3.3 [dB]

Fan size	Speed rpm	Portion 3.1	Portion 3.2 at an octave center frequency of [Hz] 63	125	250	500	1000	2000	4000	8000	Portion 3.3
400	1250	18	26	22	14	18	25	30	35	39	12
	1600	16	26	22	13	18	21	28	32	37	11
	2000	14	26	22	12	17	19	25	30	34	10
	2500	12	26	22	20	11	16	22	27	32	9
	3150	10	27	23	20	11	16	19	25	29	8
450	1120	19	25	15	18	20	25	30	34	39	12
	1400	16	25	21	13	17	23	27	32	37	11
	1800	14	25	21	12	16	19	25	29	34	10
	2240	13	25	21	12	16	18	22	27	32	9
	2800	11	25	22	19	11	15	20	24	29	8
500	1000	18	25	14	17	20	25	30	34	39	11
	1250	16	24	20	13	17	23	27	32	37	10
	1600	14	24	20	12	16	19	25	29	34	9
	2000	12	24	20	11	16	18	22	27	32	9
	2500	11	24	21	19	11	15	20	24	29	8
560	900	19	22	14	18	20	25	29	34	39	11
	1120	17	23	13	17	19	23	27	32	37	10
	1400	15	23	19	12	16	21	25	29	34	9
	1800	13	23	20	11	16	18	22	27	32	9
	2240	11	23	20	11	16	17	20	24	29	8
630	800	19	21	13	17	20	25	29	34	39	11
	1000	17	22	13	16	19	23	27	32	37	10
	1250	15	22	19	12	16	21	25	29	34	9
	1600	13	22	19	11	16	18	22	27	32	8
	2000	19	22	19	10	16	17	20	24	29	8
710	710	19	20	14	16	21	25	29	34	39	11
	900	17	20	13	16	19	22	27	31	37	10
	1120	15	21	12	16	17	20	24	29	34	9
	1400	13	21	18	11	16	19	22	26	32	8
	1800	12	21	18	11	16	16	20	24	29	8
800	630	19	19	13	16	21	27	29	34	39	10
	800	17	19	12	16	18	22	27	31	37	9
	1000	15	20	12	16	17	20	24	29	34	8
	1250	13	20	17	11	16	18	22	26	32	8
	1600	12	20	18	10	16	16	20	24	29	8
900	560	19	14	16	17	21	24	29	34	39	10
	710	17	18	12	16	20	22	26	31	36	9
	900	15	18	12	15	18	20	24	29	34	8
	1120	14	19	11	15	17	18	22	26	32	8
	1400	12	19	17	11	16	17	20	24	29	7
1000	500	19	13	15	17	21	24	29	34	39	9
	630	17	17	12	16	19	22	26	31	36	9
	800	15	17	11	15	18	20	24	29	34	8
	1000	13	18	11	15	17	18	22	26	32	7
	1250	12	18	16	10	16	17	20	24	29	7
1120	450	16	11	16	17	18	21	25	30	35	8
	560	15	10	16	17	18	19	23	28	33	7
	710	13	20	9	15	18	17	20	25	30	7
	900	11	20	9	16	17	16	18	23	28	6
	1120	10	20	8	16	17	15	16	20	25	6
1250	400	16	12	16	17	18	21	25	30	35	8
	500	15	11	15	17	18	19	23	28	33	8
	630	13	10	15	17	17	17	20	25	30	7
	800	12	19	9	15	18	16	18	23	28	6
	1000	10	19	9	16	17	15	16	20	25	6
1400	355	16	11	15	17	18	21	25	30	35	8
	450	15	10	15	17	18	19	23	28	33	7
	560	13	9	15	17	17	17	20	25	30	7
	710	12	18	9	15	18	16	18	23	28	6
	900	10	19	8	16	17	15	16	20	25	6
1600	315	12	12	12	13	14	16	21	26	31	6
	400	14	11	15	17	17	18	22	27	33	7
	500	13	10	15	18	17	17	20	25	30	7
	630	12	9	15	18	18	15	18	23	28	6
	800	10	18	9	16	18	15	16	20	25	6

TLT-Turbo GmbH
Am Weinberg 68 · D-36251 Bad Hersfeld / Germany
Tel.: +49.6621.950-0 · Fax: +49.6621.950-100

CENTRIFUGAL VENTILATING FANS
REH SERIES – SINGLE INLET SINGLE WIDTH
MAIN DIMENSIONS
SIZES 400 – 1000 M3

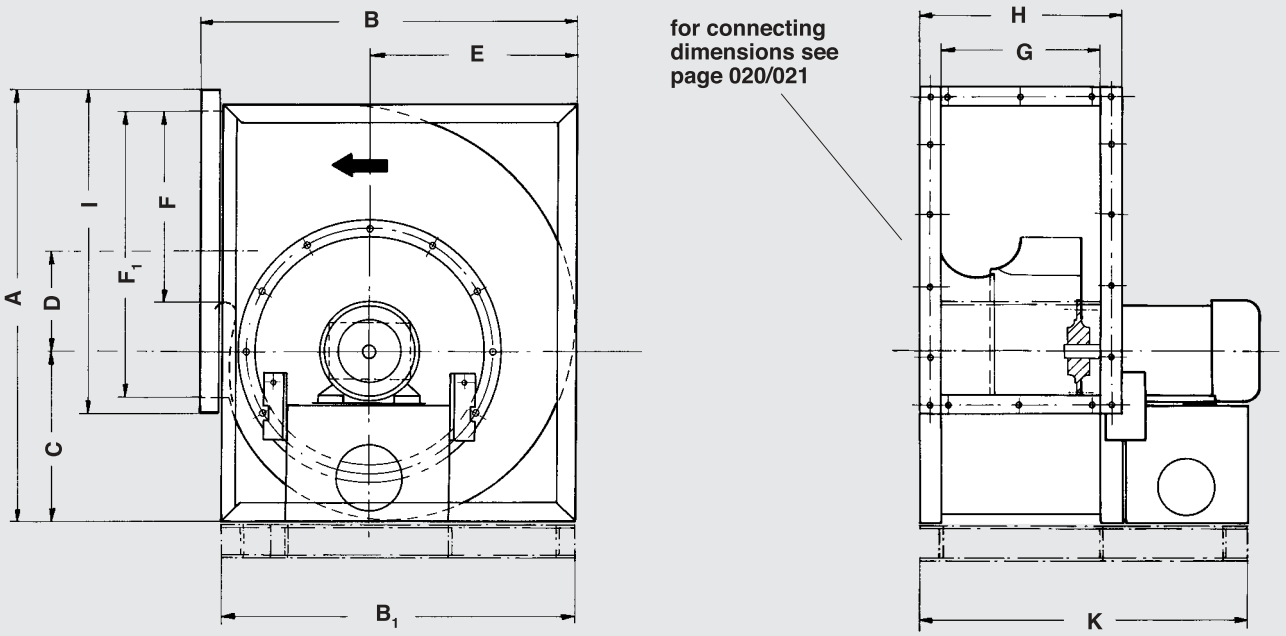

LG90° (RD90°)*

(refer to page 013)

Casing position LG0° (RD0°)*

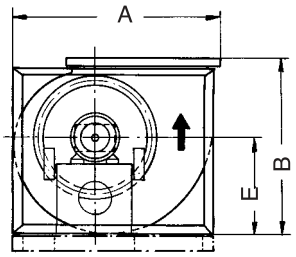

LG 180° (RD 180°)*

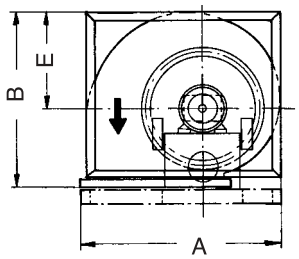

LG 270° (RD 270°)*

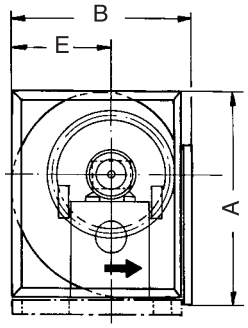

Size	A	B	B_1	C	D	E	F	F1	G	H	I				kg (approx.) 1)
400	776	670	632	306	179	369	340	502	282	362	582				46
450	874	755	708	351	202	410	380	562	317	397	642				65
500	957	827	780	380	221	457	425	632	357	437	712				88
560	1070	920	875	427	247	509	477	712	402	482	792				95
630	1211	1026	983	479	291	574	550	802	452	532	882				130
710	1343	1152	1102	539	313	647	600	899	502	586	983				210
800	1505	1289	1216	604	359	726	673	999	559	643	1083				250
900	1702	1443	1376	674	407	811	755	1119	629	753	1243				340
1000	1872	1577	1509	746	433	894	848	1249	712	836	1373				460

1) Without motor / without baseframe

*Mirror-inverted casing position

Dimensional and design changes reserved.

Dimensions in mm

TLT-Turbo GmbH
Am Weinberg 68 · D-36251 Bad Hersfeld / Germany
Tel.: +49.6621.950-0 · Fax: +49.6621.950-100

CENTRIFUGAL VENTILATING FANS
REH SERIES – SINGLE INLET SINGLE WIDTH
BASEFRAME DIMENSIONS
SIZES 400 – 1000

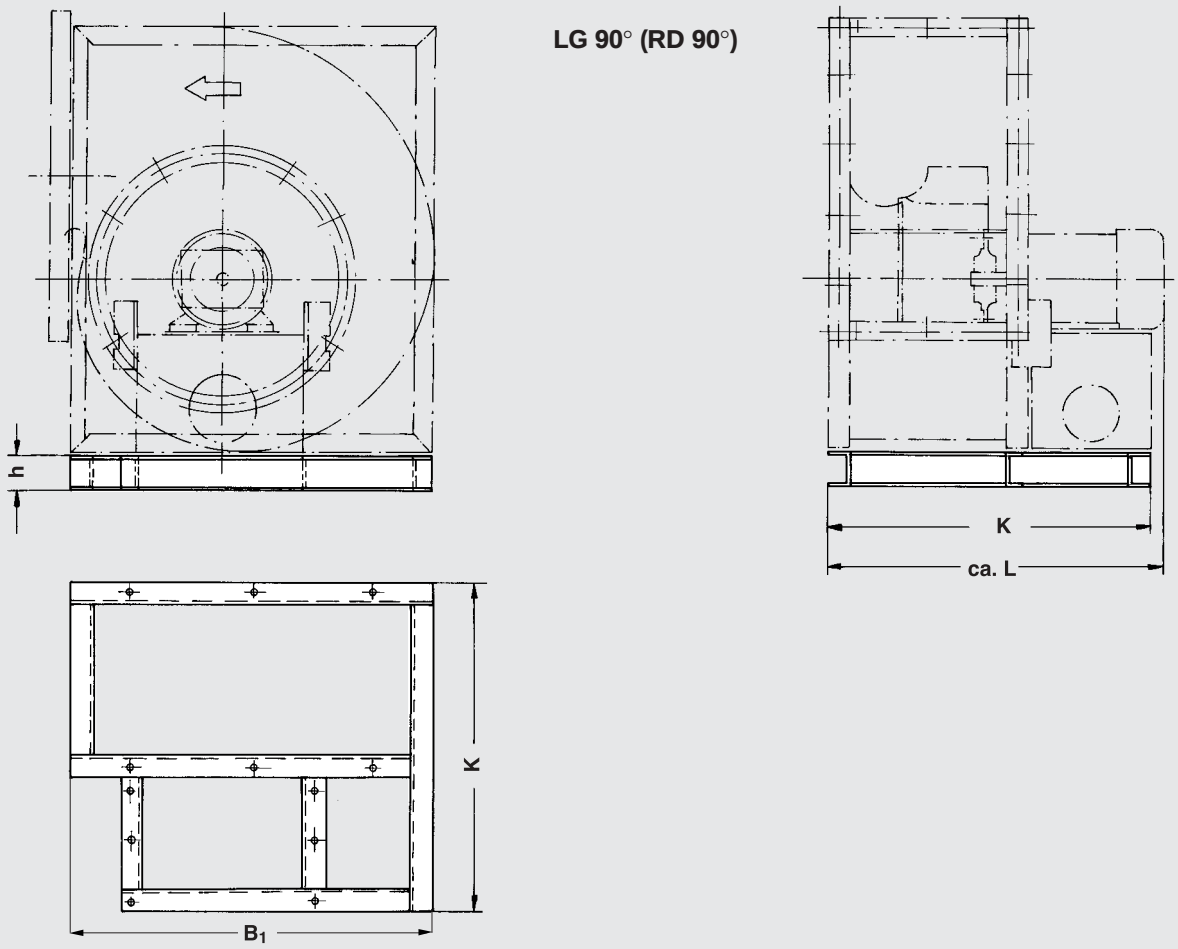

(refer to page 012)

Size	MB[1)]	K	h	L (approx.)	ML[2)]
400	90	579	65	605	70
	100	602	65	635	70
	112	622	65	650	70
	132	708	80	750	
	160	858	80	915	
	180	998	80	975	
450	90	615	65	640	70
	100	640	65	675	70
	112	390	65	690	70
	132	747	80	795	
	160	866	80	955	
	180	936	80	1015	
500	90	622	65	685	70
	100	685	65	715	70
	112	716	65	730	70
	132	791	80	830	
	160	931	80	994	
	180	981	80	1055	
	200	1028	100	1115	

Size	MB[1)]	K	h	L (approx.)	ML[2)]
560	90	703	65	725	80
	100	746	65	755	80
	112	746	65	775	80
	132	832	80	870	
	160	972	80	1035	
	180	1022	80	1095	
	200	1072	100	1150	
630	90	756	80	580	80
	100	779	80	810	80
	112	829	80	825	80
	132	879	100	910	
	160	1019	100	1080	
	180	1069	100	1140	
	200	1129	120	1200	
710	112	878	100	900	100
	132	948	100	980	100
	160	1088	100	1135	
	180	1148	140	1200	
	200	1198	140	1255	

Size	MB[1)]	L (approx.)	h	ca. L	ML[2)]
800	112	925	100	945	110
	132	995	100	1030	110
	160	1135	100	1165	
	180	1195	140	1235	
	200	1245	140	1290	
900	112	1012	100	1015	110
	132	1282	100	1100	110
	160	1132	100	1235	
	180	1282	140	1300	
	200	1332	140	1360	
	225	1372	140	1420	
1000	112	1095	100	1110	140
	132	1165	100	1190	140
	160	1305	100	1330	140
	180	1365	140	1395	140
	200	1415	140	1450	140
	225	1455	140	1485	

1) Motor size 2) Non-standard shaft length Dimensional and design changes reserved. Dimensions in mm

TLT-Turbo GmbH
Am Weinberg 68 · D-36251 Bad Hersfeld / Germany
Tel.: +49.6621.950-0 · Fax: +49.6621.950-100

CENTRIFUGAL VENTILATING FANS
REH SERIES – SINGLE INLET SINGLE WIDTH
MAIN DIMENSIONS
SIZES 400 – 630 R38 R39

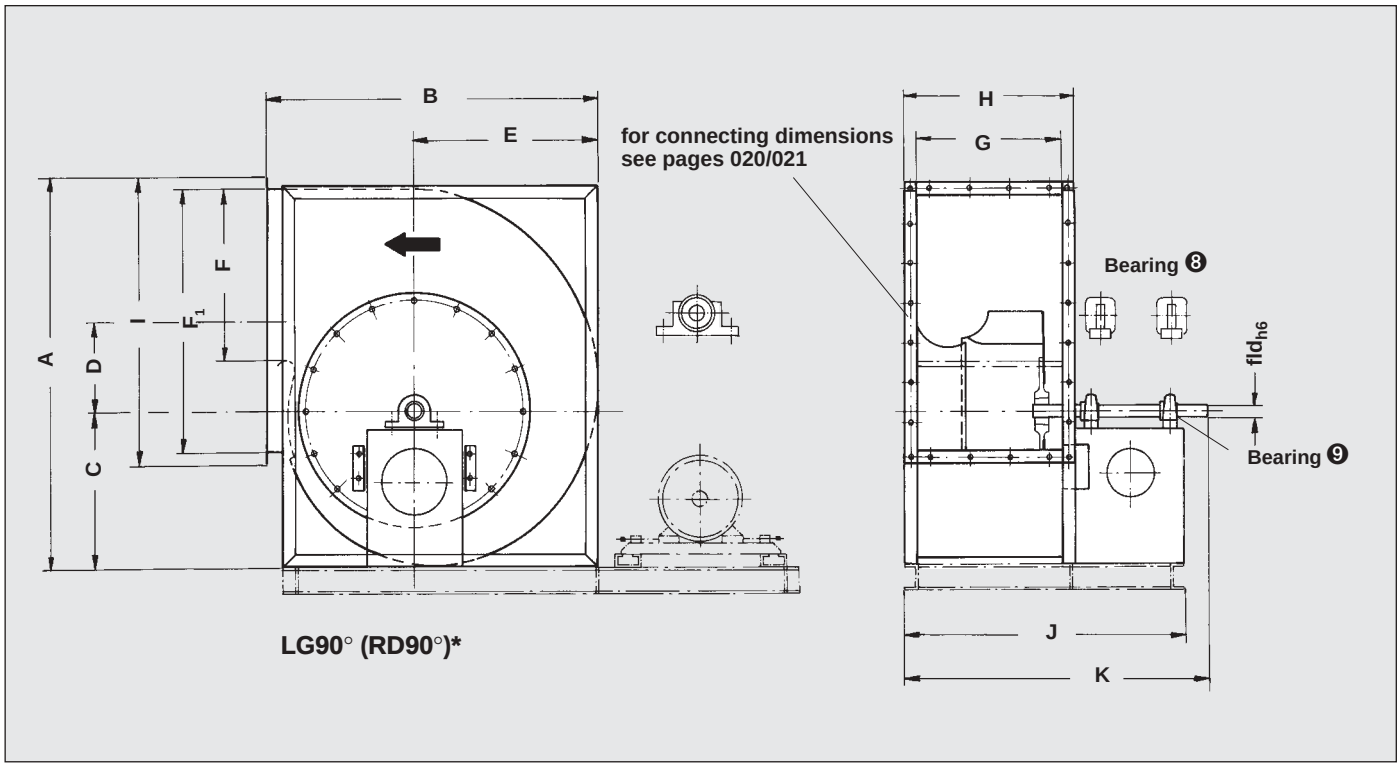

Casing position LG0° (RD0°)*

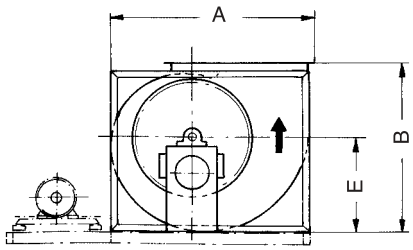

LG 180° (RD 180°)*

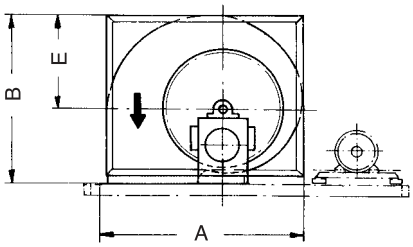

LG 270° (RD 270°)*

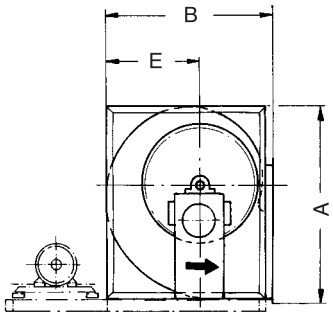

Size	A	B	C	D	E	F	F1	G	H	I	J	K	fld_{h6}		kg (approx.)
400	776	670	306	179	369	340	502	282	362	582	615	698	30		46
450	874	755	351	202	410	380	562	317	397	642	652	744	30		65
500	957	827	380	221	457	425	632	357	437	712	747	850	40		88
560	1070	920	427	247	509	477	712	402	482	792	790	898	40		95
630	1211	1026	479	291	574	550	802	452	532	882	842	946	40		130

1) Without motor / without baseframe
Without V-belt drive

* Mirror-inverted casing position

Dimensional and design changes reserved.

Dimensions in mm

TLT-Turbo GmbH
Am Weinberg 68 · D-36251 Bad Hersfeld / Germany
Tel.: +49.6621.950-0 · Fax: +49.6621.950-100

CENTRIFUGAL VENTILATING FANS
REH SERIES – SINGLE INLET SINGLE WIDTH
BASEFRAME DIMENSIONS
SIZES 400 – 630

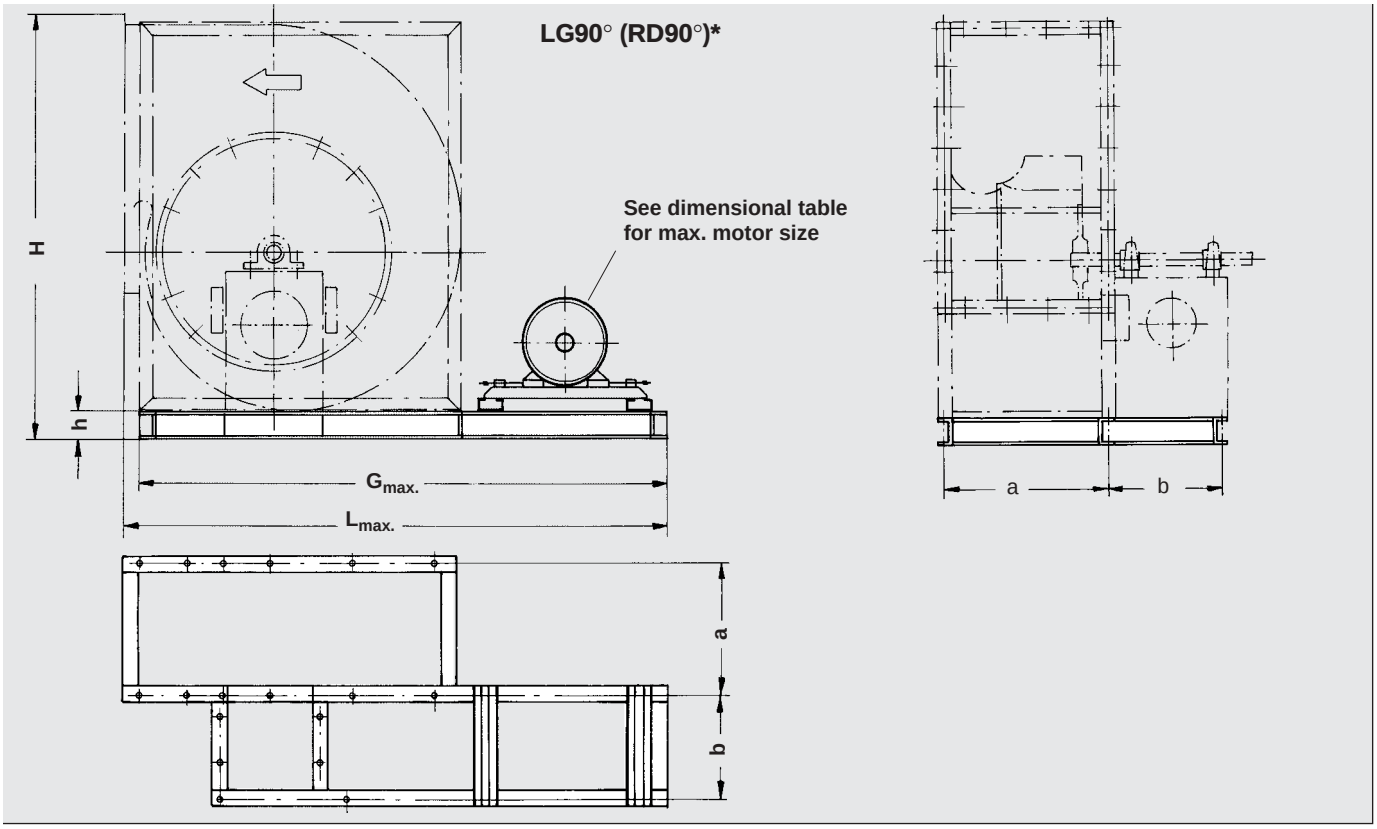

Casing position LG0° (RD0°)*

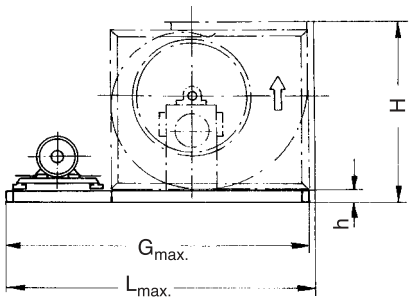

LG 180° (RD 180°)*

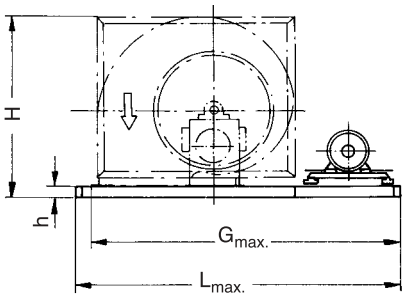

LG 270° (RD 270°)*

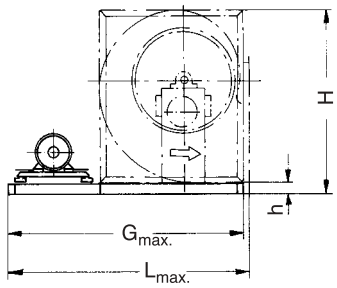

Size	Motor size	LG 0° / RD 0°			LG 90° + 270° / RD 90° + 270°			LG 180° / RD 180°			a	b	h	kg (approx.)
		$L_{max.}$	$G_{max.}$	H	$L_{max.}$	$G_{max.}$	H	$L_{max.}$	$G_{max.}$	H				
400	90-112	1350	1305	735	1250	1205	841	upon request		735	326	258	65	34
	132-180	1600	1555	750	1400	1355	856			750	326	258	80	46
450	90-112	1500	1455	820	1350	1305	939			820	367	255	65	36
	132-180	1650	1605	835	1500	1455	954			835	367	255	80	48
500	90-112	1600	1555	892	1450	1405	1022			892	405	311	65	38
	132-180	1750	1705	907	1600	1555	1037			907	405	311	80	50
	200	1850	1805	927	1700	1655	1057			927	405	311	100	67
560	90-112	1700	1655	985	1550	1505	1135			985	446	313	65	40
	132-180	1850	1805	1000	1700	1655	1150			1000	446	313	80	53
	200	1950	1905	1020	1800	1755	1170			1020	446	313	100	70
630	90-112	1800	1755	1106	1650	1605	1291			1106	496	313	80	52
	132-180	1950	1905	1126	1800	1755	1311			1126	496	313	100	68
	200	2050	2005	1146	1900	1855	1331			1146	496	313	120	82

*Mirror-inverted casing position

Dimensional and design changes reserved.

Dimensions in mm

TLT-Turbo GmbH
Am Weinberg 68 · D-36251 Bad Hersfeld / Germany
Tel.: +49.6621.950-0 · Fax: +49.6621.950-100

CENTRIFUGAL VENTILATING FANS
REH SERIES – SINGLE INLET SINGLE WIDTH
MAIN DIMENSIONS
SIZES 710 – 1000 R38 R39

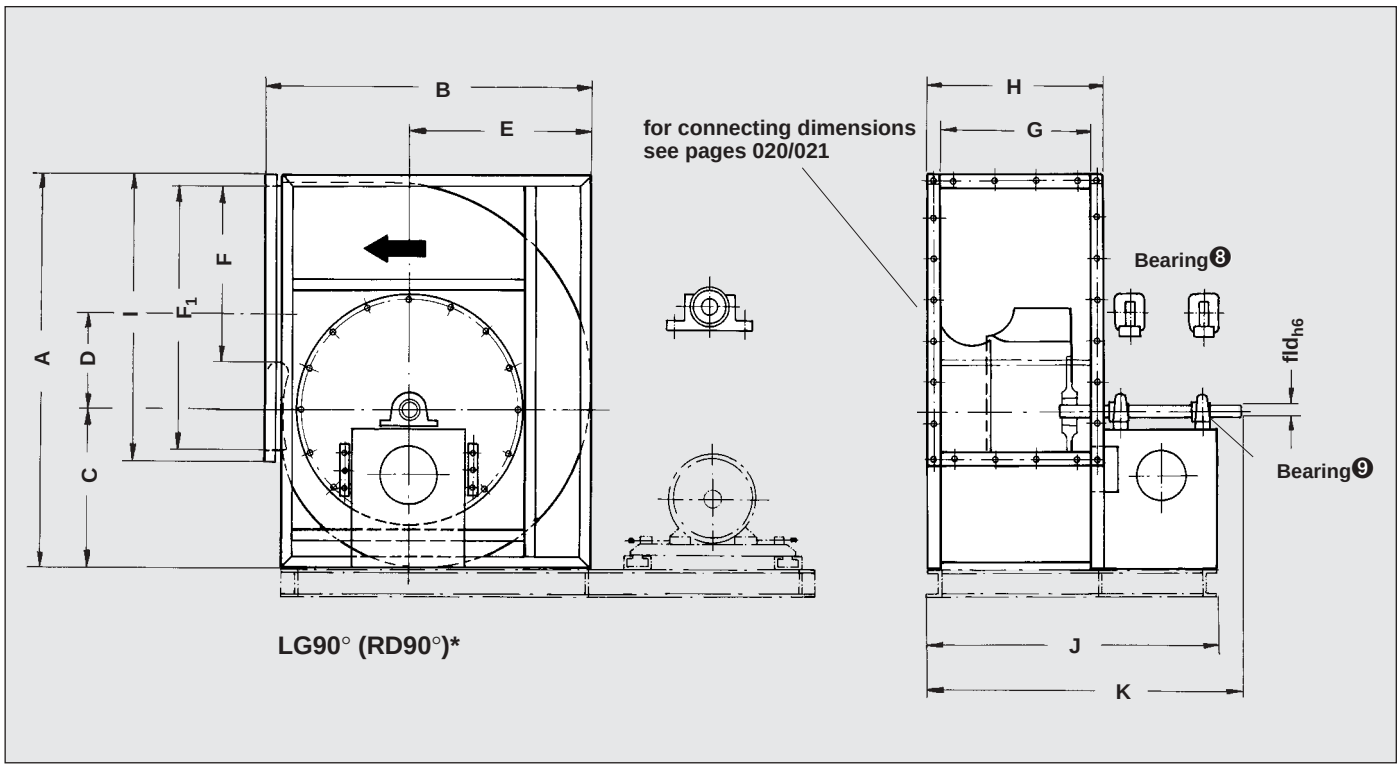

Casing position LG0° (RD0°)*

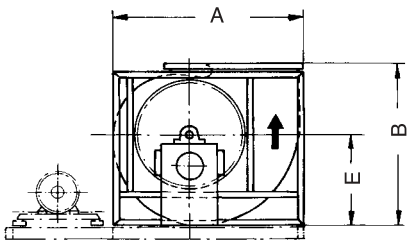

LG 180° (RD 180°)*

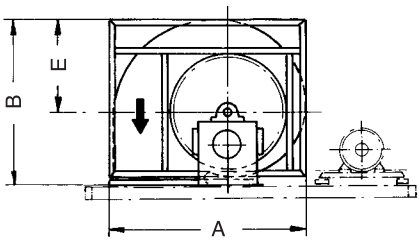

LG 270° (RD 270°)*

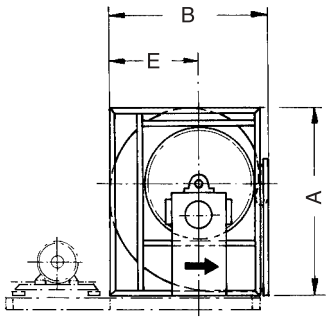

Size	A	B	C	D	E	F	F1	G	H	I	J	K	fld_{h6}		kg 1) (approx.)
710	1343	1152	539	313	647	600	899	499	583	983	931	1034	50		210
800	1505	1289	604	359	726	673	999	559	643	1083	991	1087	50		250
900	1702	1443	674	407	811	755	1119	629	753	1243	1080	1184	55		340
1000	1871	1577	746	438	894	848	1249	709	833	1373	1329	1455	55		460

1) Without motor / without baseframe
Without V-belt drive

* Mirror-inverted casing position

Dimensional and design changes reserved.

Dimensions in mm

TLT-Turbo GmbH
Am Weinberg 68 · D-36251 Bad Hersfeld / Germany
Tel.: +49.6621.950-0 · Fax: +49.6621.950-100

CENTRIFUGAL VENTILATING FANS
REH SERIES – SINGLE INLET SINGLE WIDTH
BASEFRAME DIMENSIONS
SIZES 710 – 1000

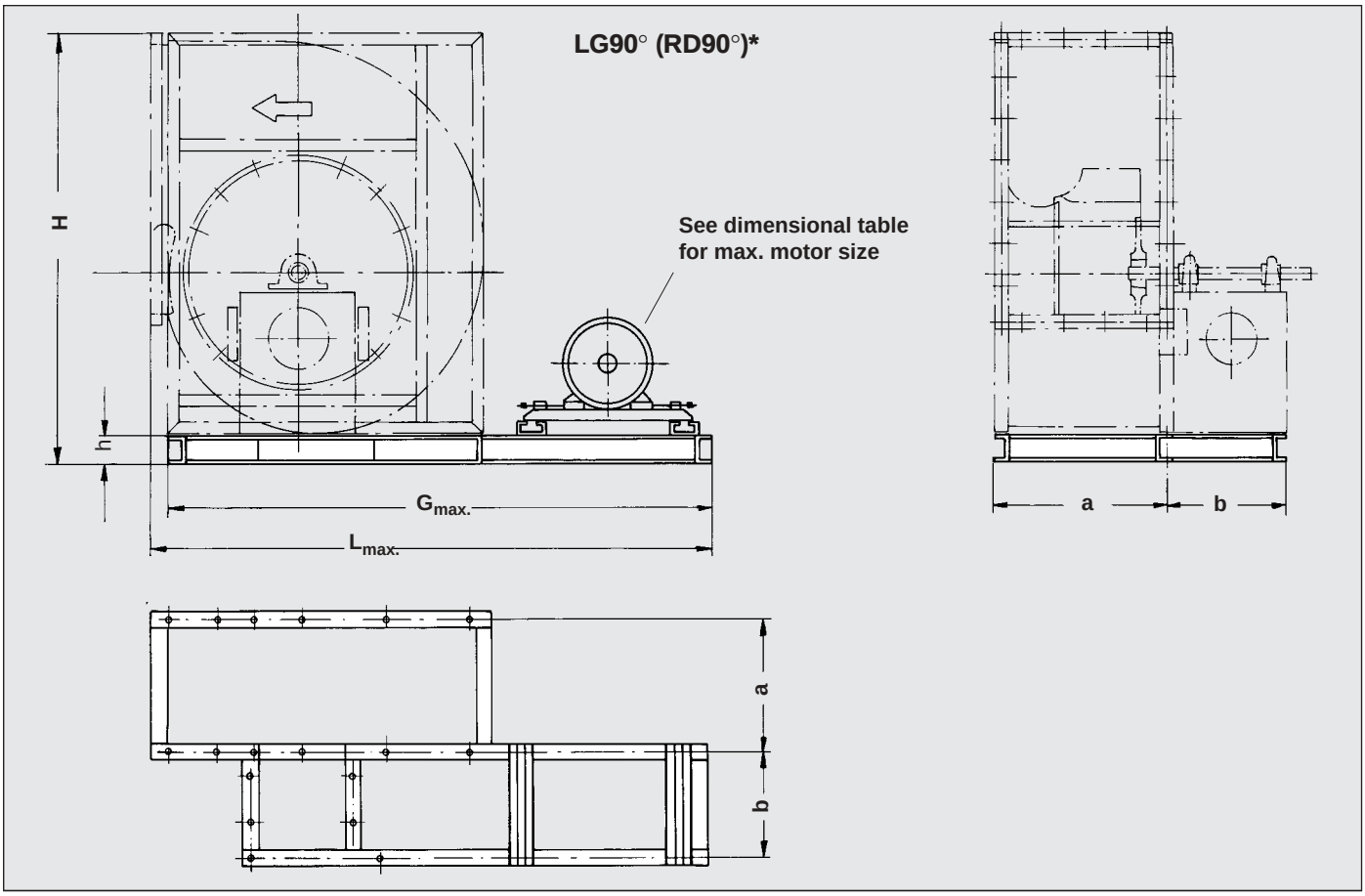

Casing position LG0° (RD0°)*

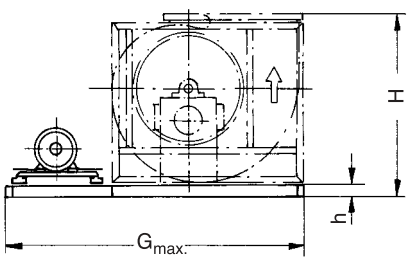

LG 180° (RD 180°)*

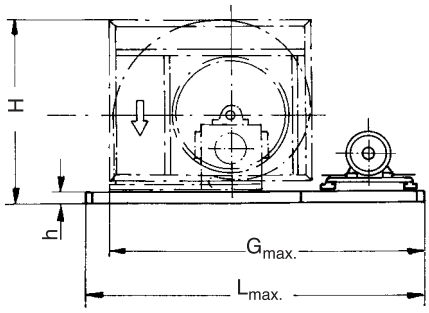

LG 270° (RD 270°)*

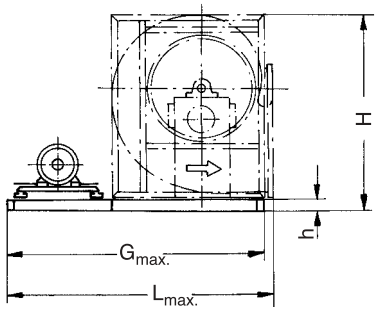

Size	Motor size	LG 0° / RD 0°		LG 90° + 270° / RD 90° + 270°			LG 180° / RD 180°			a	b	h	kg (approx.)
		$G_{max.}$	H	$L_{max.}$	$G_{max.}$	H	$L_{max.}$	$G_{max.}$	H				
710	112-160	2100	1252	1900	1845	1443	upon request		1252	548	345	100	80
	180-200	2300	1292	2000	1945	1483			1292	548	345	140	120
800	112-160	2200	1389	2100	2025	1605			1389	608	345	100	85
	180-200	2400	1429	2400	2325	1645			1429	608	345	140	130
900	112-160	2400	1543	2200	2135	1802			1543	694	346	100	95
	180-225	2600	1583	2400	2335	1842			1583	694	346	140	140
1000	112-160	2600	1677	2400	2330	1971			1677	774	510	100	105
	180-225	2800	1717	2600	2530	2011			1717	774	510	140	160

*Mirror-inverted casing position

Dimensional and design changes reserved.

Dimensions in mm

TLT-Turbo GmbH
Am Weinberg 68 · D-36251 Bad Hersfeld / Germany
Tel.: +49.6621.950-0 · Fax: +49.6621.950-100

CENTRIFUGAL VENTILATING FANS
REH SERIES – SINGLE INLET SINGLE WIDTH
MAIN DIMENSIONS
SIZES 1120 – 1600 R38

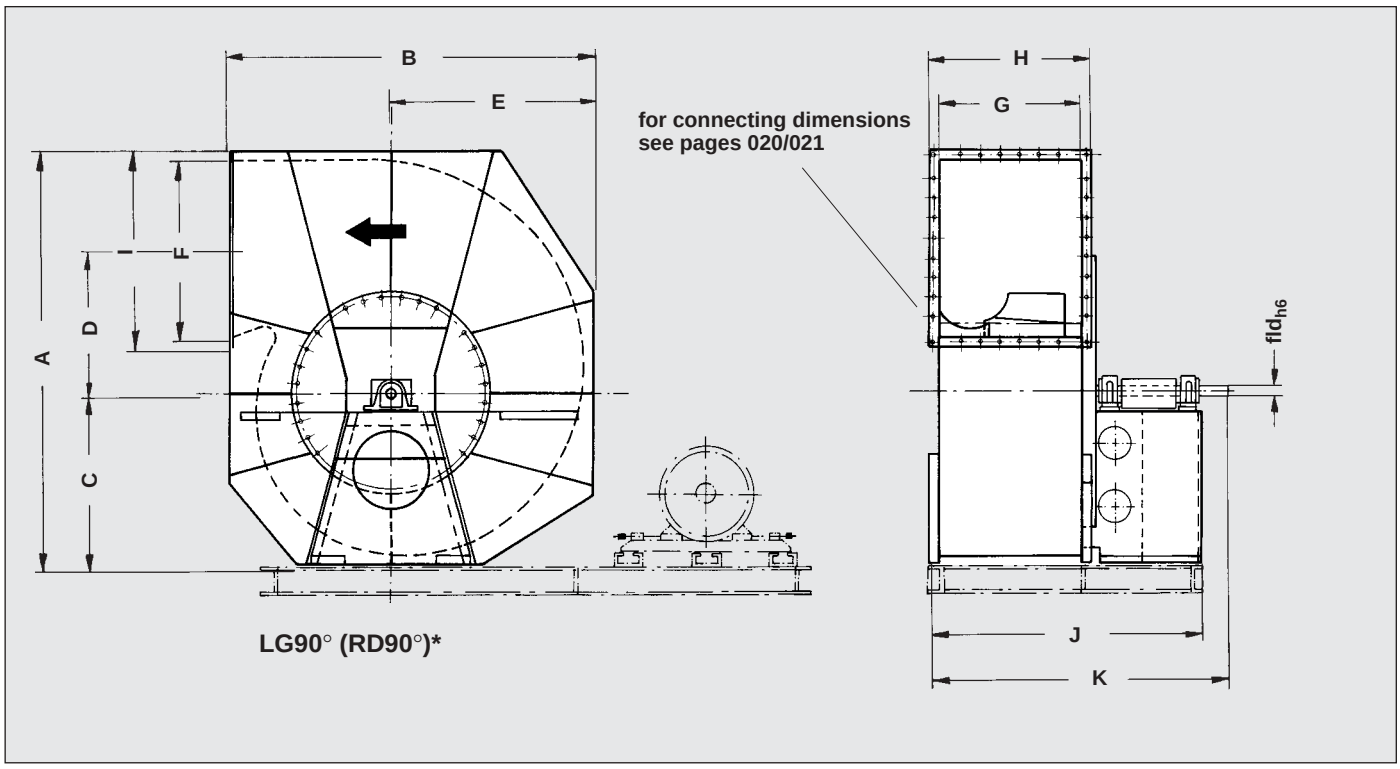

Casing position LG0° (RD0°)*

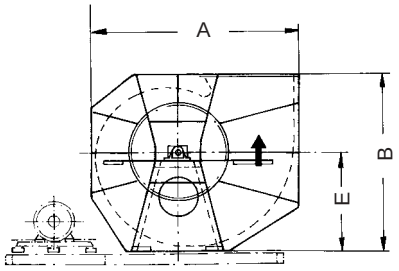

LG 180° (RD 180°)*

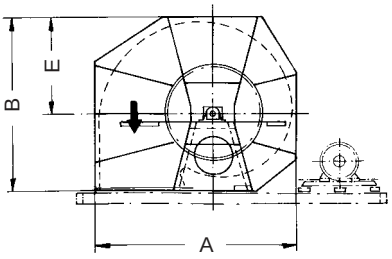

LG 270° (RD 270°)*

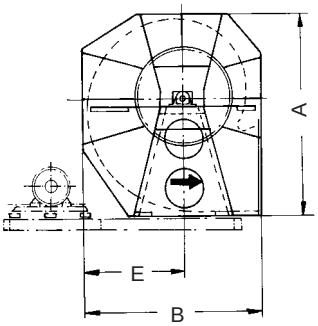

Size	A	B	C	D	E	F	G	H	I	J	K	fld$_{h6}$		kg 1) (approx.)
1120	2350	2072	974	813	1162	1002	802	922	1122	1438	1563	55		700
1250	2625	2320	1088	911	1298	1122	902	1028	1248	1733	1908	65		1000
1400	2930	2600	1218	1023	1455	1252	1002	1128	1378	1834	2025	70		1500
1600	3269	2896	1357	1148	1611	1402	1122	1248	1528	2159	2373	90		1850

1) Without motor / without baseframe
Without V-belt drive

*Mirror-inverted casing position

Dimensional and design changes reserved.

Dimensions in mm

TLT-Turbo GmbH
Am Weinberg 68 · D-36251 Bad Hersfeld / Germany
Tel.: +49.6621.950-0 · Fax: +49.6621.950-100

CENTRIFUGAL VENTILATING FANS
REH SERIES – SINGLE INLET SINGLE WIDTH
BASEFRAME DIMENSIONS
SIZES 1120 – 1600

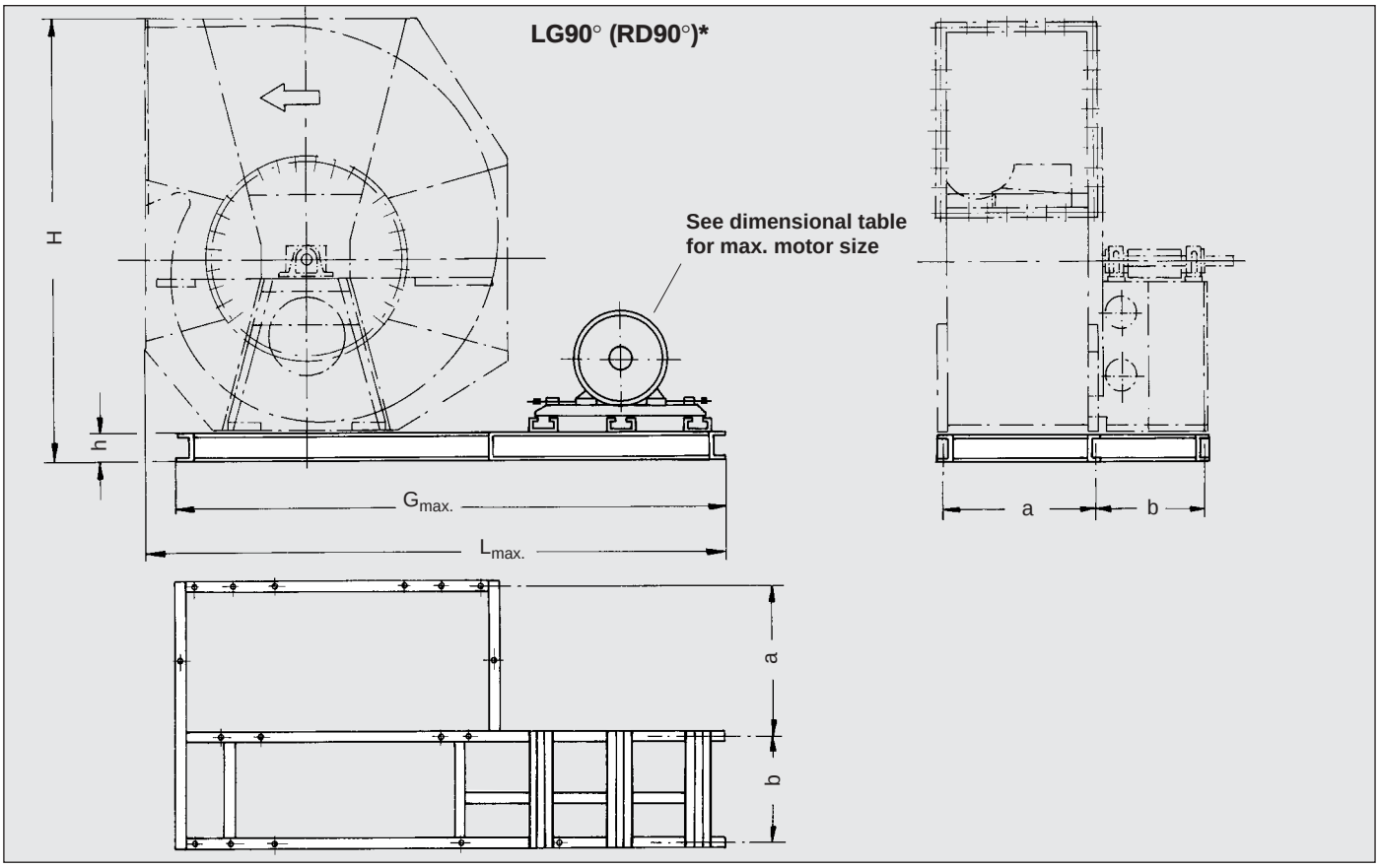

Casing position LG0° (RD0°)*

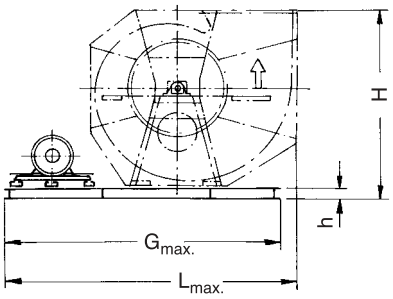

LG 180° (RD 180°)*

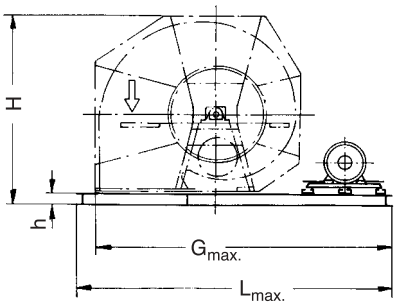

LG 270° (RD 270°)*

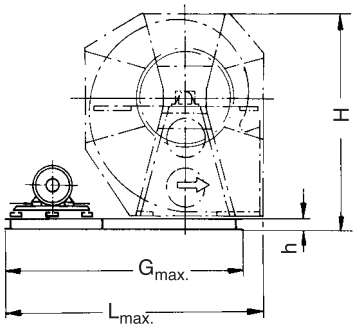

Size	Motor size	LG 0° / RD 0°			LG 90° + 270° / RD 90° + 270°			LG 180° / RD 180°			a	b	h	kg (approx.)
		$L_{max.}$	$G_{max.}$	H	$L_{max.}$	$G_{max.}$	H	$L_{max.}$	$G_{max.}$	H				
1120	132-180	3100	2970	2192	2800	2670	2470	upon request		2192	878	510	120	155
	200-250	3300	3170	2232	3100	2970	2510			2232	878	510	160	220
1250	160-180	3400	3270	2440	3100	2970	2745			2440	978	705	120	185
	200-250	3600	3470	2480	3300	3170	2785			2480	978	705	160	260
	280	3800	3670	2500	3500	3370	2805			2500	978	705	180	300
1400	160-180	3700	3570	2720	3400	3270	3050			2720	1100	675	120	200
	200-250	3900	3770	2760	3600	3470	3090			2760	1100	675	160	280
	280-315	4100	3970	2780	3800	3670	3110			2780	1100	675	180	325
1600	160-180	4100	3970	3016	3800	3670	3389			3016	1220	865	120	225
	200-250	4300	4170	3056	4000	3870	3429			3056	1220	865	160	310
	280-315	4500	4370	3076	4200	4070	3449			3076	1220	865	180	365

*Mirror-inverted casing position

Dimensional and design changes reserved.

Dimensions in mm

TLT-Turbo GmbH
Am Weinberg 68 · D-36251 Bad Hersfeld / Germany
Tel.: +49.6621.950-0 · Fax: +49.6621.950-100

CENTRIFUGAL VENTILATING FANS
REH SERIES – SINGLE INLET SINGLE WIDTH
ACCESSORIES

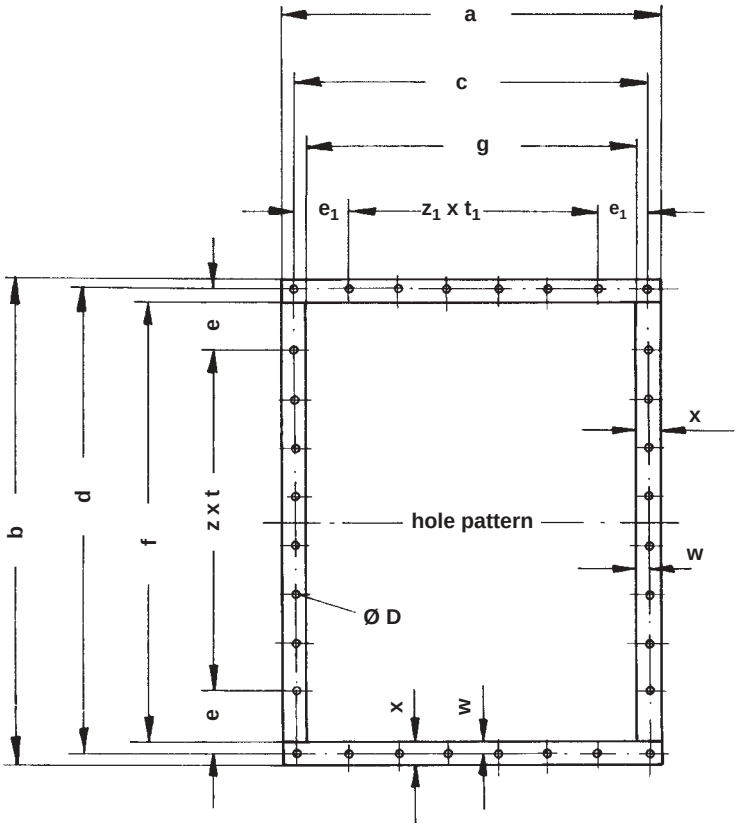

Matching angular frame

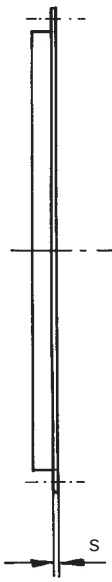

Flexible connection, rectangular

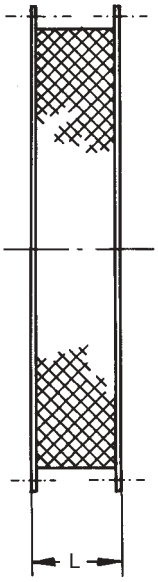

Size	a	c	g	z_1 x t_1	e_1	b	d	f	z x t	e	w	x	Ø D	s	L
400	362	326	282	–	163	582	546	502	3 x 125	85,5	22	40	12	4	130
450	397	361	317	1 x 125	118	642	606	562	3 x 125	115,5	22	40	12	4	130
500	437	401	357	1 x 125	138	712	676	632	3 x 125	150,5	22	40	12	4	130
560	482	446	402	1 x 125	160,5	792	756	712	5 x 125	65,5	22	40	12	4	130
630	532	496	452	3 x 125	60,5	882	846	802	5 x 125	110,5	22	40	12	4	130
710	582	546	502	3 x 125	85,5	982	946	902	5 x 125	160,5	22	40	12	4	130
800	642	606	562	3 x 125	115,5	1082	1046	1002	7 x 125	85,5	22	40	12	4	130
900	752	702	632	3 x 125	163,5	1242	1192	1122	7 x 125	158,5	35	60	12	6	130
1000	832	782	712	5 x 125	78,5	1372	1322	1252	9 x 125	98,5	35	60	12	6	130
1120	922	872	802	5 x 125	123,5	1124	1072	1002	7 x 125	98,5	35	60	12	4	200
1250	1022	972	902	5 x 125	173,5	1242	1192	1122	7 x125	158,5	35	60	12	6	200
1400	1122	1072	1002	7 x 125	98,5	1372	1322	1252	9 x 125	98,5	35	60	12	6	200
1600	1242	1192	1122	7 x 125	158,5	1522	1472	1402	9 x 125	173,5	35	60	12	6	200

Dimensions in mm

TLT-Turbo GmbH
Am Weinberg 68 · D-36251 Bad Hersfeld / Germany
Tel.: +49.6621.950-0 · Fax: +49.6621.950-100

CENTRIFUGAL VENTILATING FANS
REH SERIES – SINGLE INLET SINGLE WIDTH
ACCESSORIES

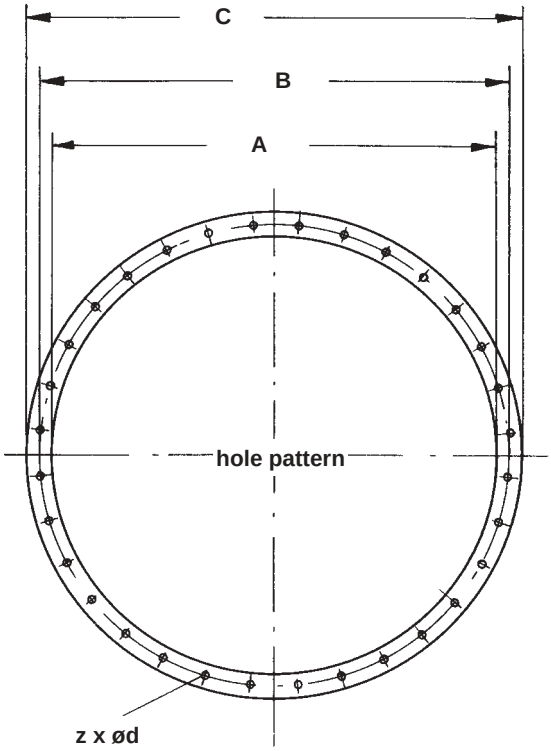

Matching flange

Flexible connection, round

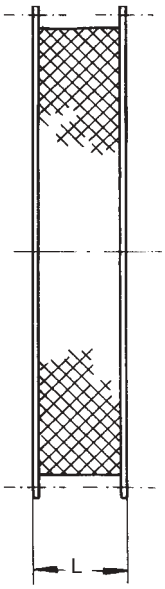

Size	ØA	ØB	ØC	Z x ød	s	L									
400	403	438	464	12 x 9,5	6	180									
450	452	487	513	12 x 9,5	6	180									
500	506	541	567	12 x 9,5	6	180									
560	568	605	639	16 x 11,5	6	180									
630	637	674	708	16 x 11,5	6	180									
710	714	775	814	16 x 14	8	180									
800	804	861	904	24 x 14	8	180									
900	904	958	1004	24 x 14	8	180									
1000	1005	1067	1105	24 x 14	8	180									
1120	1005	1067	1105	24 x 14	8	200									
1250	1125	1200	1245	32 x 18	10	200									
1400	1255	1337	1375	32 x 18	10	200									
1600	1405	1475	1525	32 x 18	10	200									

Dimensions in mm

TLT-Turbo GmbH
Am Weinberg 68 · D-36251 Bad Hersfeld / Germany
Tel.: +49.6621.950-0 · Fax: +49.6621.950-100

CENTRIFUGAL VENTILATING FANS
REH SERIES – SINGLE INLET SINGLE WIDTH
ACCESSORIES

Outlet duct with wire guard

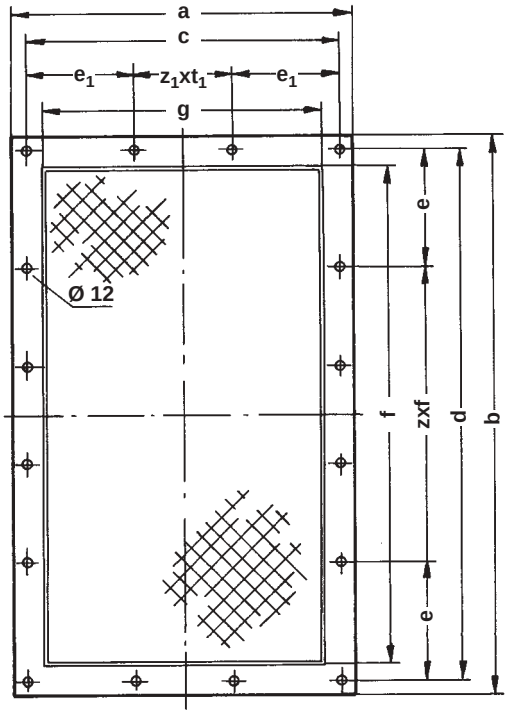

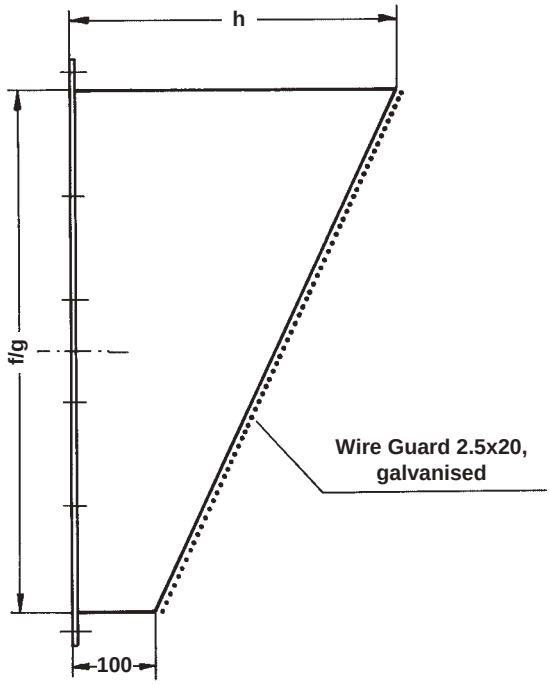

Size	a	c	g	z_1xt_1	e_1	b	d	f	zxt	e	h				
400	362	326	282	-	163	582	546	502	3x125	85,5	334				
450	397	361	317	1x125	118	642	606	562	3x125	115,5	362				
500	437	401	357	1x125	138	712	676	632	3x125	150,5	395				
560	482	446	402	1x125	160,5	792	756	712	5x125	65,5	432				
630	532	496	452	3x125	60,5	882	846	802	5x125	110,5	474				
710	582	546	502	3x125	85,5	982	946	902	5x125	160,5	521				
800	642	606	562	3x125	115,5	1082	1046	1002	7x125	85,5	567				
900	752	702	632	3x125	163,5	1242	1192	1122	7x125	158,5	623				
1000	832	782	712	5x125	78,5	1372	1322	1252	9x125	98,5	684				
1120	922	872	802	5x125	123,5	1124	1072	1002	7x125	98,5	567				
1250	1022	972	902	5x125	173,5	1242	1192	1122	7x125	158,5	623				
1400	1122	1072	1002	7x125	98,5	1372	1322	1252	9x125	98,5	684				
1600	1242	1192	1122	7x125	158,5	1522	1472	1402	9x125	173,5	754				

Maße in mm

TLT-Turbo GmbH
Am Weinberg 68 · D-36251 Bad Hersfeld / Germany
Tel.: +49.6621.950-0 · Fax: +49.6621.950-100

ORDERING CODE FOR CENTRIFUGAL VENTILATING FANS
REH / RZH SERIES

Ordering Example: R Z H 710 E 3 9 LG 90 AL

Fan type	Centrifugal fan	**R**
Type of inlet	Single Inlet Single Width Double Inlet Double Width	**E** **Z**
Impeller design	High-performance impeller	**H**
Fan size	400 / 450 / 500 / 560 630 / 710 / 800 / 900 / 1000 1120 / 1250 / 1400 / 1600	
Type	For installation in equipment/system completion With baseframe for motor and V-belt drive With baseframe and motor pedestal for direct drive	**E** **R** **M**
Casing construction	Welded	**3**
Bearing types	Self-aligning ball or roller bearing in split cast-iron plummer block (heavy-duty bearing) Deep-groove ball bearing, RASE type (light-duty bearing)	**8** **9**
Direction of rotation*	Left Right	**LG** **RD**
Casing position*	0° / 90° / 180° / 270°	
Drive layout*	Left-hand drive Right-hand drive Central drive	AL AR AM

*Direction of rotation, casing position and drive layout are stated as viewed from the drive side.

TLT-Turbo GmbH
Am Weinberg 68 · D-36251 Bad Hersfeld / Germany
Tel.: +49.6621.950-0 · Fax: +49.6621.950-100

CENTRIFUGAL VENTILATING FANS
SELECTION EXAMPLE - REH 710
REH SERIES
SINGLE INLET SINGLE WIDTH

TLT-Turbo GmbH
Am Weinberg 68 · D-36251 Bad Hersfeld / Germany
Tel.: +49.6621.950-0 · Fax: +49.6621.950-100

Centrifugal Ventilating Fans
Single Inlet Single Width
Characteristics curves - REH 710

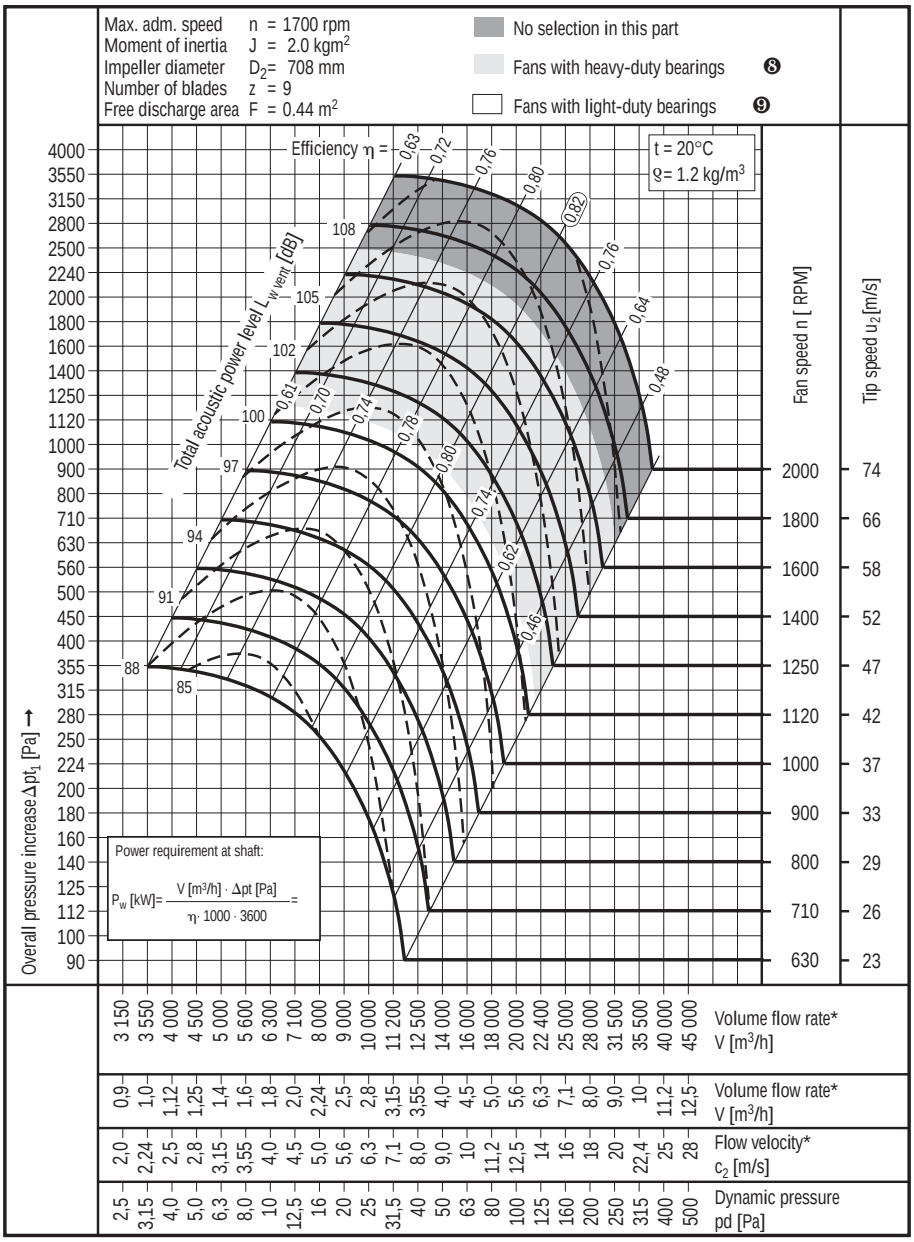

* Values rounded to standard figures

Selection Example

Centrifugal-type ventilating fan for duct connection with the following operating data:

Volume flow rate	V	= 20000 m³/h
Overall pressure increase	Δpt	= 1800 Pa
Temperature	t	= 20°C
Density	ϱ	= 1.2 kg/m³

The following parameters are to be determined:

Fan speed	n	= 1650 rpm
Motor speed	n	= 1500 rpm
Tip speed	u_2	= 60 m/s
Flow velocity	c_2	= 12.5 m/s
Dynamic pressure	pd	= 100 Pa
Total acoustic power level	L_w	= 103.5 dB
Efficiency	η	= 0.82

Power requirements at shaft:

$$P_W\ [kW] = \frac{V\ [m^3/h] \cdot \Delta pt\ [Pa]}{\eta \cdot 1000 \cdot 3600} =$$

$$P_W = \frac{20000 \cdot 1800}{0{,}82 \cdot 1000 \cdot 3600} = 12.19\ kW$$

Recommended motor output rating:
P_W + 15% = 12.19 x 1.15 = 14 kW
Standard motor: 15 kW

TLT-Turbo GmbH
Am Weinberg 68 · D-36251 Bad Hersfeld / Germany
Tel.: +49.6621.950-0 · Fax: +49.6621.950-100

CENTRIFUGAL VENTILATING FANS SINGLE INLET SINGLE WIDTH CHARACTERISTICS CURVES REH 400

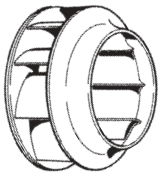

Max. adm. speed n = 3600 rpm
Moment of inertia J = 0.13 kgm²
Impeller diameter D_2 = 398 mm
Number of blades z = 9
Free discharge area F = 0.141 m²

No selection in this part
Fans with heavy-duty bearings ❽
Fans with light-duty bearings ❾

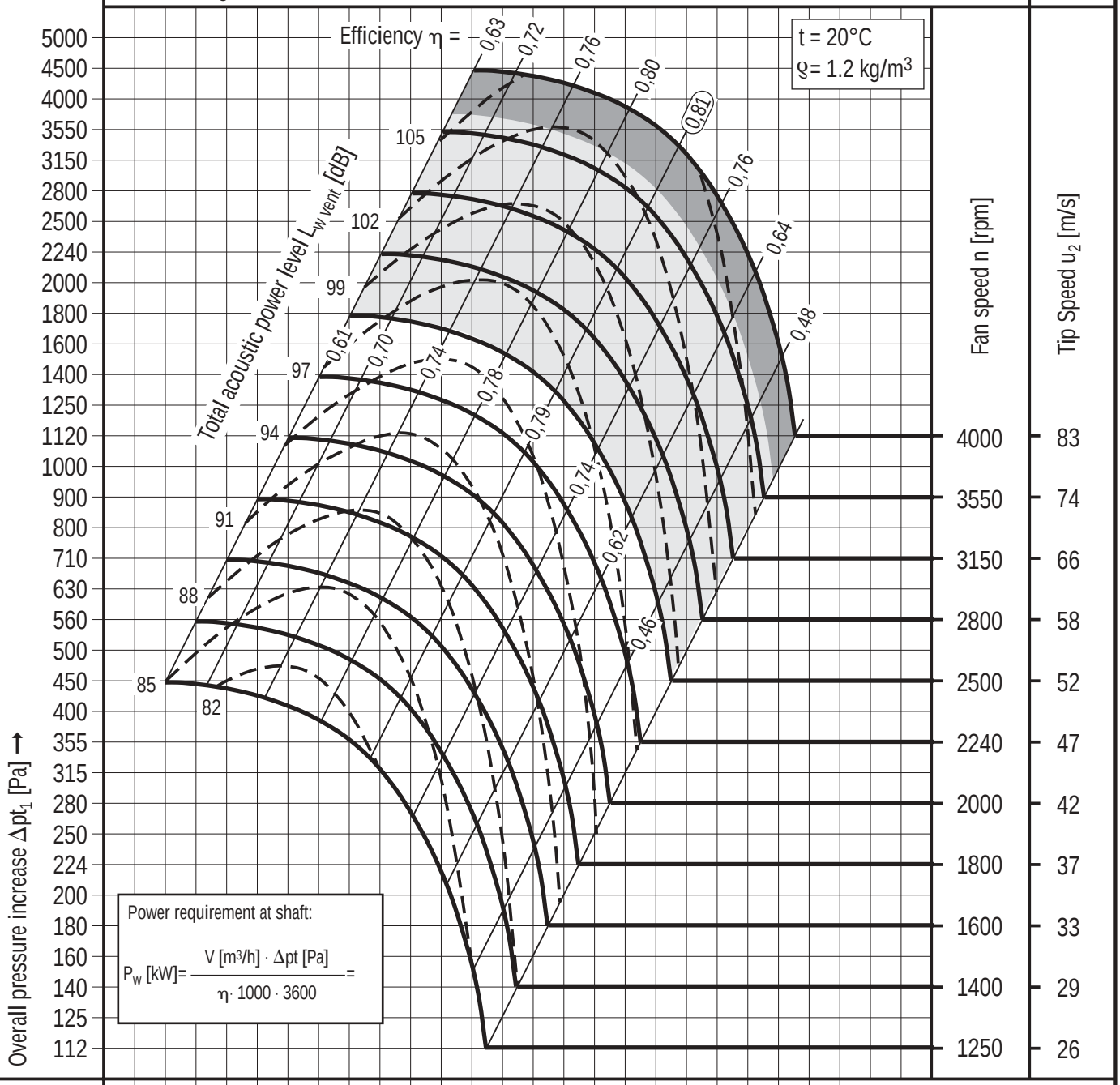

Volume flow rate* V [m³/h]	1 120	1 250	1 400	1 600	1 800	2 000	2 240	2 500	2 800	3 150	3 550	4 000	4 500	5 000	5 600	6 300	7 100	8 000	9 000	10 000	11 200	12 500	14 000	16 000
Volume flow rate* V [m³/s]	0,315	0,355	0,4	0,45	0,5	0,56	0,63	0,71	0,8	0,9	1,0	1,12	1,25	1,4	1,6	1,8	2,0	2,24	2,5	2,8	3,15	3,55	4,0	4,5
Flow velocity* c_2 [m/s]	2,24	2,5	2,8	3,15	3,55	4,0	4,5	5,0	5,6	6,3	7,1	8,0	9,0	10	11,2	12,5	14	16	18	20	22,4	25	28	35,5
Dynamic Pressure* pd [Pa]	3,15	4,0	5,0	6,3	8,0	10	12,5	16	20	25	31,5	40	50	63	80	100	125	160	200	250	315	400	500	630

* Values rounded to standard figures

TLT-Turbo GmbH
Am Weinberg 68 · D-36251 Bad Hersfeld / Germany
Tel.: +49.6621.950-0 · Fax: +49.6621.950-100

CENTRIFUGAL VENTILATING FANS SINGLE INLET SINGLE WIDTH CHARACTERISTICS CURVES REH 450

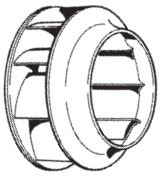

Max. adm. speed n = 3200 rpm
Moment of inertia J = 0.19 kgm²
Impeller diameter D_2 = 447 mm
Number of blades z = 9
Free discharge area F = 0.178 m²

No selection in this part
Fans with heavy-duty bearings ❽
Fans with light-duty bearings ❾

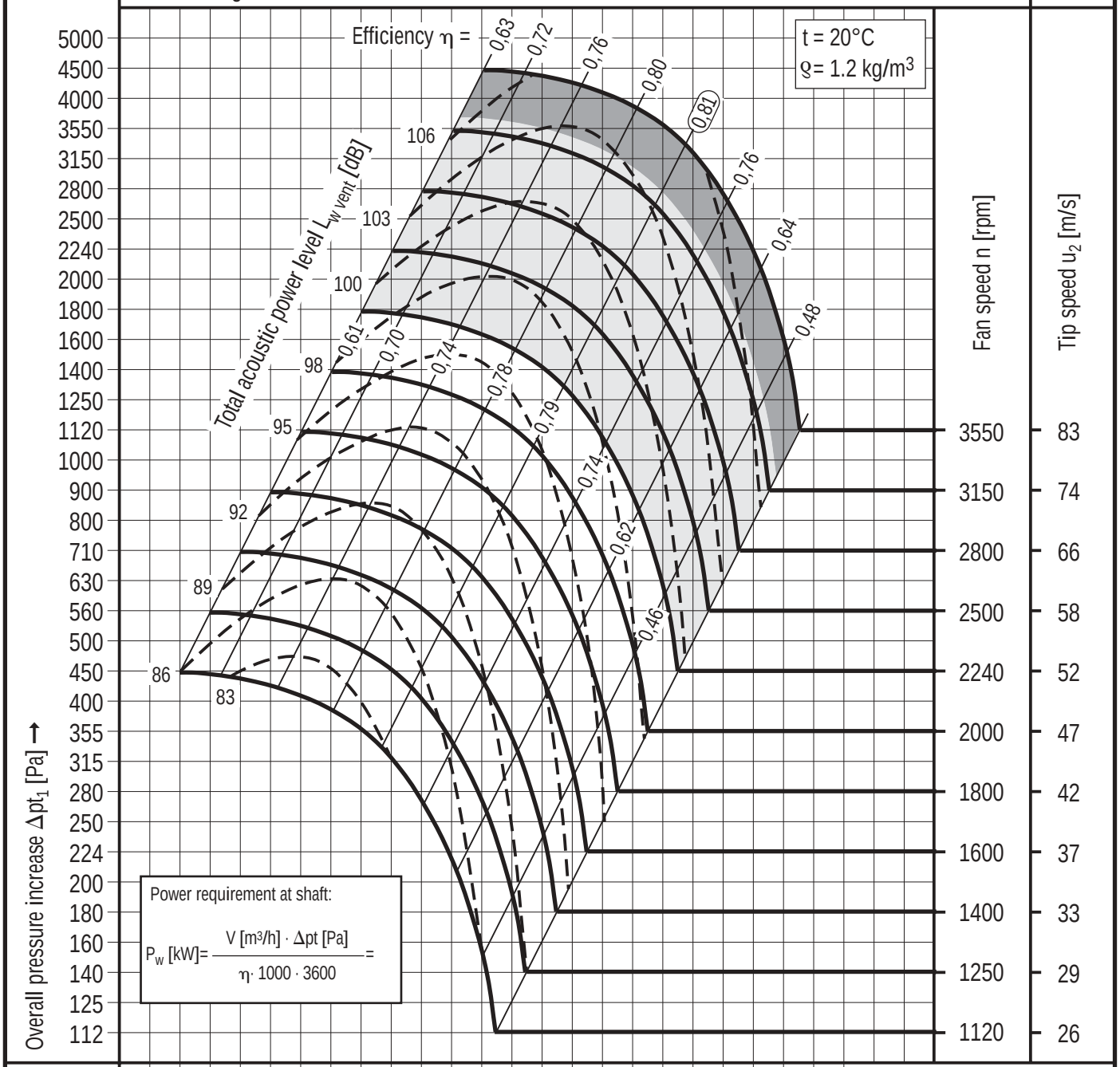

Volume flow rate* V [m³/h]	1 400	1 600	1 800	2 000	2 240	2 500	2 800	3 150	3550	4 000	4 500	5 000	5 600	6 300	7 100	8 000	9000	10 000	11 200	12 500	14 000	16 000	18 000	20 000
Volume flow rate* V [m³/s]	0,4	0,45	0,5	0,56	0,63	0,71	0,8	0,9	1,0	1,12	1,25	1,4	1,6	1,8	2,0	2,24	2,5	2,8	3,15	3,55	4,0	4,5	5,0	5,6
Flow velocity* c_2 [m/s]	2,24	2,5	2,8	3,15	3,55	4,0	4,5	5,0	5,6	6,3	7,1	8,0	9,0	10	11,2	12,5	14	16	18	20	22,4	25	28	35,5
Dynamic pressure* pd [Pa]	3,15	4,0	5,0	6,3	8,0	10	12,5	16	20	25	31,5	40	50	63	80	100	125	160	200	250	315	400	500	630

* Values rounded to standard figures

TLT-Turbo GmbH
Am Weinberg 68 · D-36251 Bad Hersfeld / Germany
Tel.: +49.6621.950-0 · Fax: +49.6621.950-100

CENTRIFUGAL VENTILATING FANS SINGLE INLET SINGLE WIDTH CHARACTERISTICS CURVES REH 500

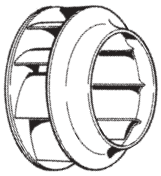

Max. adm. speed n = 2860 rpm
Moment of inertia J = 0.39 kgm²
Impeller diameter D_2 = 501 mm
Number of blades z = 9
Free discharge area F = 0.225 m²

No selection in this part
Fans with heavy-duty bearings ❽
Fans with light-duty bearings ❾

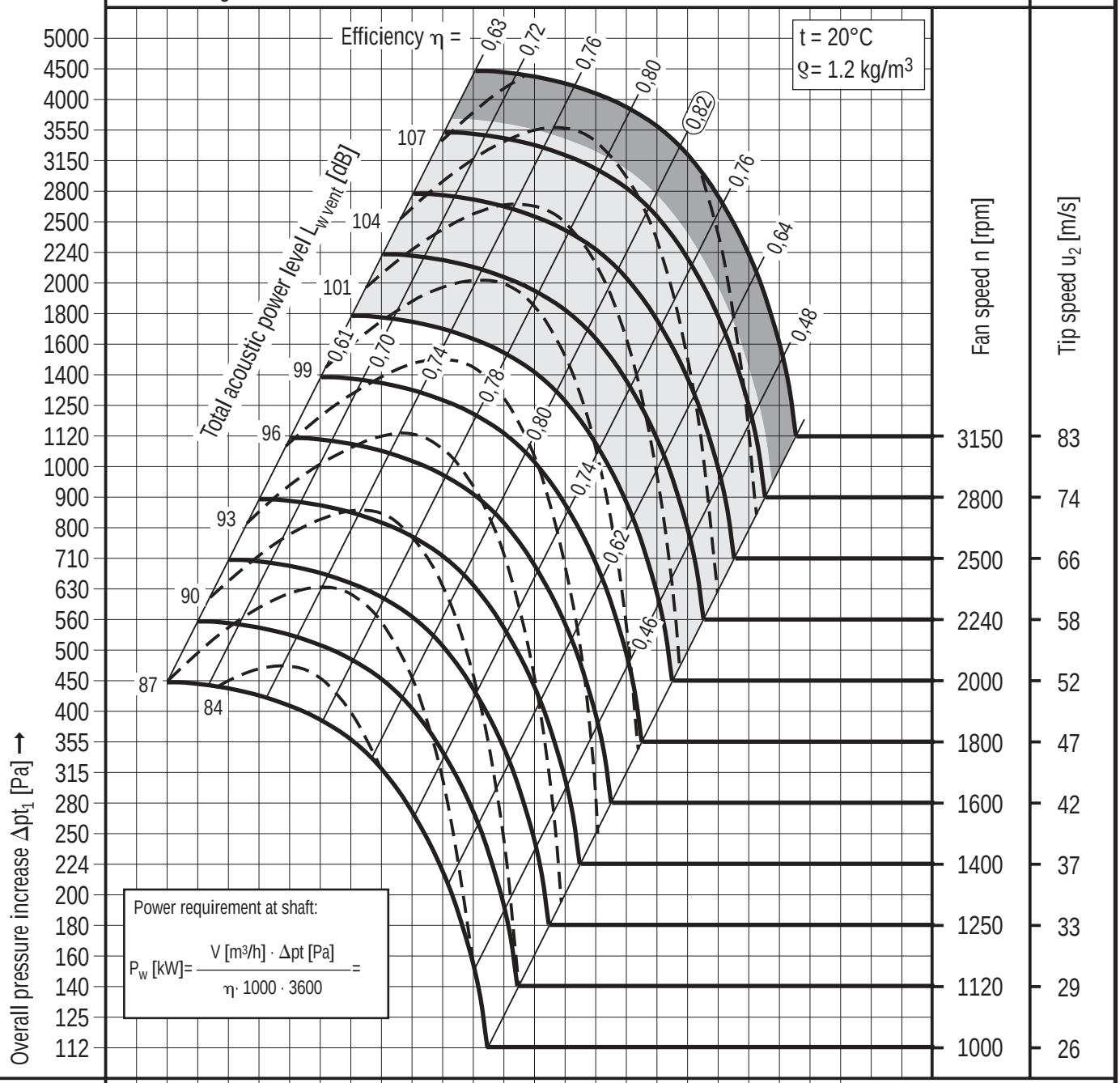

Volume flow rate* V [m³/h]	1 800	2 000	2 240	2 500	2 800	3 150	3 550	4 000	4 500	5 000	5 600	6 300	7 100	8 000	9 000	10 000	11 200	12 500	14 000	16 000	18 000	20 000	22 400	25 000
Volume flow rate* V [m³/s]	0,5	0,56	0,63	0,71	0,8	0,9	1,0	1,12	1,25	1,4	1,6	1,8	2,0	2,24	2,5	2,8	3,15	3,55	4,0	4,5	5,0	5,6	6,3	7,1
Flow velocity* c_2 [m/s]	2,24	2,5	2,8	3,15	3,55	4,0	4,5	5,0	5,6	6,3	7,1	8,0	9,0	10	11,2	12,5	14	16	18	20	22,4	25	28	35,5
Dynamic pressure* pd [Pa]	3,15	4,0	5,0	6,3	8,0	10	12,5	16	20	25	31,5	40	50	63	80	100	125	160	200	250	315	400	500	630

* Values rounded to standard figures

TLT-Turbo GmbH
Am Weinberg 68 · D-36251 Bad Hersfeld / Germany
Tel.: +49.6621.950-0 · Fax: +49.6621.950-100

CENTRIFUGAL VENTILATING FANS SINGLE INLET SINGLE WIDTH CHARACTERISTICS CURVES REH 560

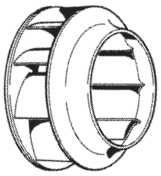

Max. adm. speed n = 2550 rpm
Moment of inertia J = 0.61 kgm²
Impeller diameter D_2 = 562 mm
Number of blades z = 9
Free discharge area F = 0.286 m²

No selection in this part
Fans with heavy duty-bearings ❽
Fans with light-duty bearings ❾

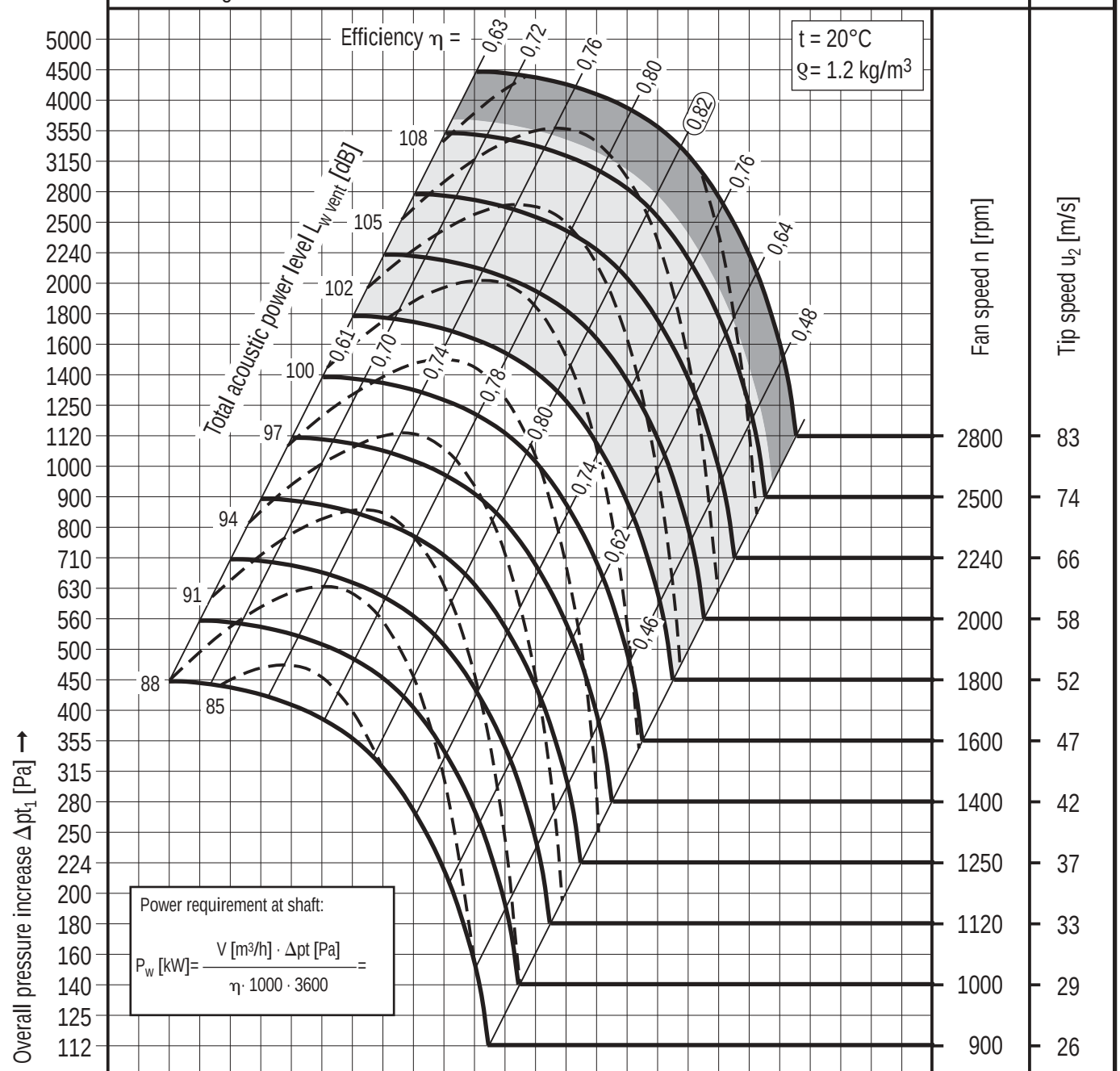

Volume flow rate* V [m³/h]	2 240	2 500	2 800	3 150	3 550	4 000	4 500	5 000	5 600	6 300	7 100	8 000	9 000	10 000	11 200	12 500	14 000	16 000	18 000	20 000	22 400	25 000	28 000	31 500	
Volume flow rate* V [m³/s]	0,63	0,71	0,8	0,9	1,0	1,12	1,25	1,4	1,6	1,8	2,0	2,24	2,5	2,8	3,15	3,55	4,0	4,5	5,0	5,6	6,3	7,1	8,0	9,0	
Flow velocity* c_2 [m/s]	2,24	2,5	2,8	3,15	3,55	4,0	4,5	5,0	5,6	6,3	7,1	8,0	9,0	10	11,2	12,5	14	16	18	20	22,4	25	28	35,5	
Dynamic pressure* pd [Pa]	3,15	4,0	5,0	6,3	8,0	10	12,5	16	20	25	31,5	40	50	63	80	100	125	160	200	250	315	400	500	630	

* Values rounded to standard figures

TLT-Turbo GmbH
Am Weinberg 68 · D-36251 Bad Hersfeld / Germany
Tel.: +49.6621.950-0 · Fax: +49.6621.950-100

CENTRIFUGAL VENTILATING FANS SINGLE INLET SINGLE WIDTH CHARACTERISTICS CURVES REH 630

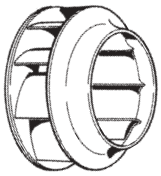

Max. adm. speed n = 2270 rpm
Moment of inertia J = 1.26 kgm²
Impeller diameter D_2 = 631 mm
Number of blades z = 9
Free discharge area F = 0.362 m²

INo selection in this part
Fans with heavy-duty bearings ❽
Fans with light-duty bearings ❾

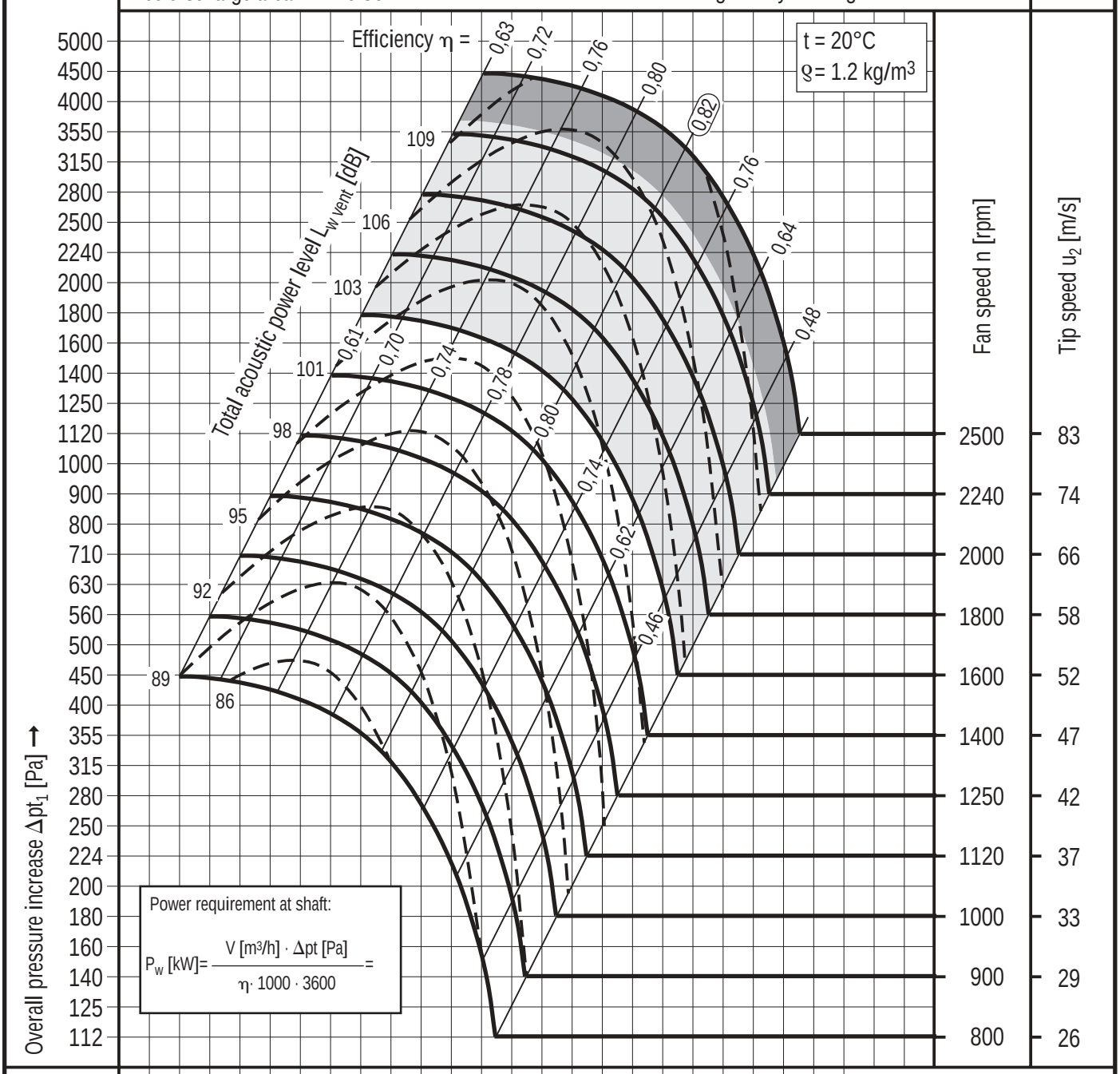

Volume flow rate* V [m³/h]	2 800	3 150	3 550	4 000	4 500	5 000	5 600	6 300	7 100	8 000	9 000	10 000	11 200	12 500	14 000	16 000	18 000	20 000	22 400	25 000	28 000	31 500	35 500	40 000
Volume flow rate* V [m³/s]	0,8	0,9	1,0	1,12	1,25	1,4	1,6	1,8	2,0	2,24	2,5	2,8	3,15	3,55	4,0	4,5	5,0	5,6	6,3	7,1	8,0	9,0	10	11,2
Flow velocity* c_2 [m/s]	2,24	2,5	2,8	3,15	3,55	4,0	4,5	5,0	5,6	6,3	7,1	8,0	9,0	10	11,2	12,5	14	16	18	20	22,4	25	28	35,5
Dynamic pressure* pd [Pa]	3,15	4,0	5,0	6,3	8,0	10	12,5	16	20	25	31,5	40	50	63	80	100	125	160	200	250	315	400	500	630

* Values rounded to standard figures

TLT-Turbo GmbH
Am Weinberg 68 · D-36251 Bad Hersfeld / Germany
Tel.: +49.6621.950-0 · Fax: +49.6621.950-100

CENTRIFUGAL VENTILATING FANS SINGLE INLET SINGLE WIDTH CHARACTERISTICS CURVES REH 710

Max. adm. speed n = 1700 rpm
Moment of inertia J = 2.0 kgm²
Impeller diameter D_2 = 708 mm
Number of blades z = 9
Free discharge area F = 0.44 m²

No selection in this part
Fans with heavy-duty bearings ❽
Fans with light-duty bearings ❾

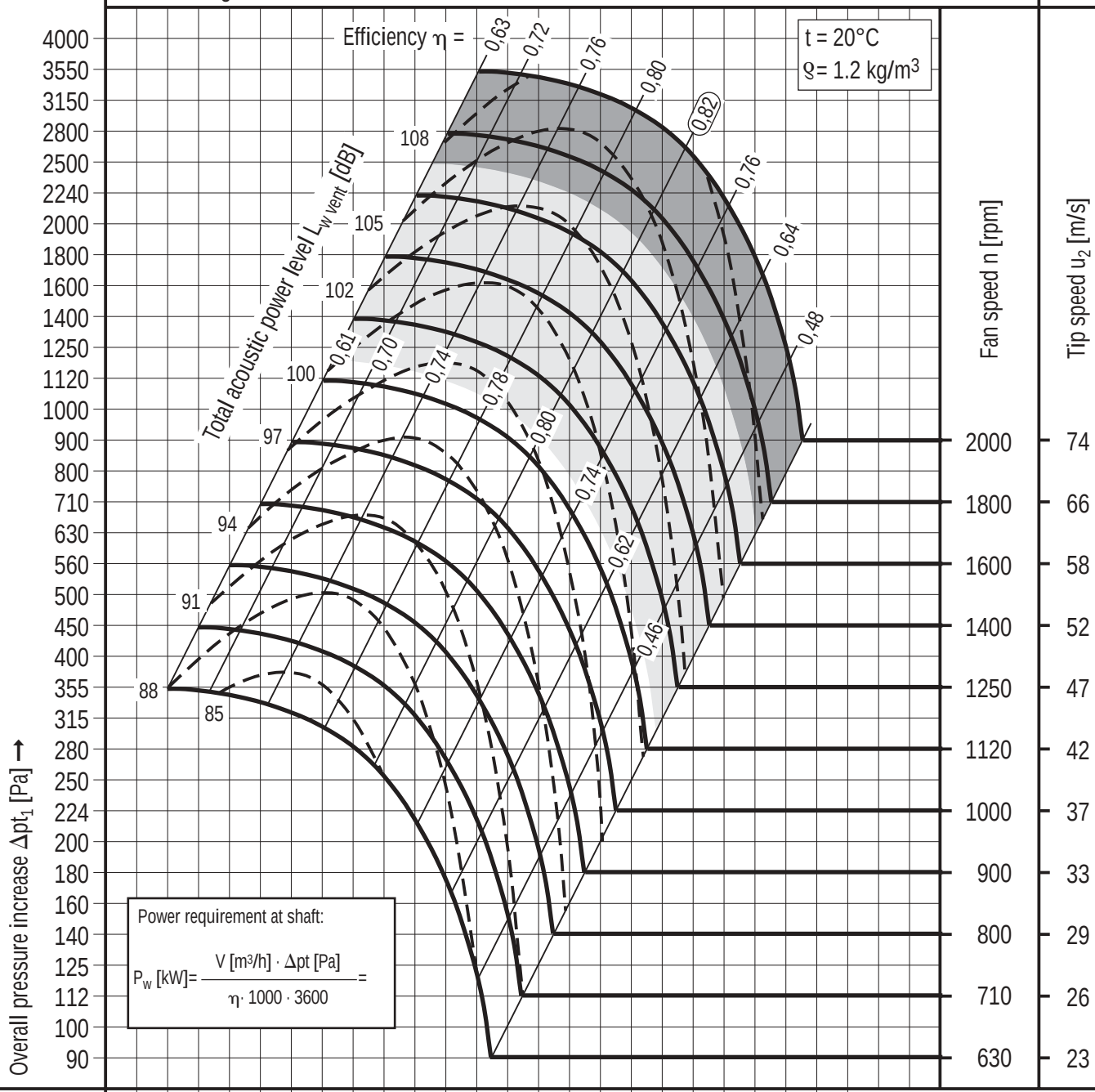

Volume flow rate* V [m³/h]	3 150	3 550	4 000	4 500	5 000	5 600	6 300	7 100	8 000	9 000	10 000	11 200	12 500	14 000	16 000	18 000	20 000	22 400	25 000	28 000	31 500	35 500	40 000	45 000
Volume flow rate* V [m³/s]	0,9	1,0	1,12	1,25	1,4	1,6	1,8	2,0	2,24	2,5	2,8	3,15	3,55	4,0	4,5	5,0	5,6	6,3	7,1	8,0	9,0	10	11,2	12,5
Flow velocity* c_2 [m/s]	2,0	2,24	2,5	2,8	3,15	3,55	4,0	4,5	5,0	5,6	6,3	7,1	8,0	9,0	10	11,2	12,5	14	16	18	20	22,4	25	28
Dynamic pressure* pd [Pa]	2,5	3,15	4,0	5,0	6,3	8,0	10	12,5	16	20	25	31,5	40	50	63	80	100	125	160	200	250	315	400	500

* Values rounded to standard figures

TLT-Turbo GmbH
Am Weinberg 68 · D-36251 Bad Hersfeld / Germany
Tel.: +49.6621.950-0 · Fax: +49.6621.950-100

CENTRIFUGAL VENTILATING FANS SINGLE INLET SINGLE WIDTH CHARACTERISTICS CURVES REH 800

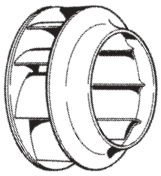

Max. adm. speed n = 1500 rpm
Moment of inertia J = 3.47 kgm²
Impeller diameter D_2 = 794 mm
Number of blades z = 9
Free discharge area F = 0.55 m²

No selection in this part
Fans with heavy-duty bearings ❽
Fans with light-duty bearings ❾

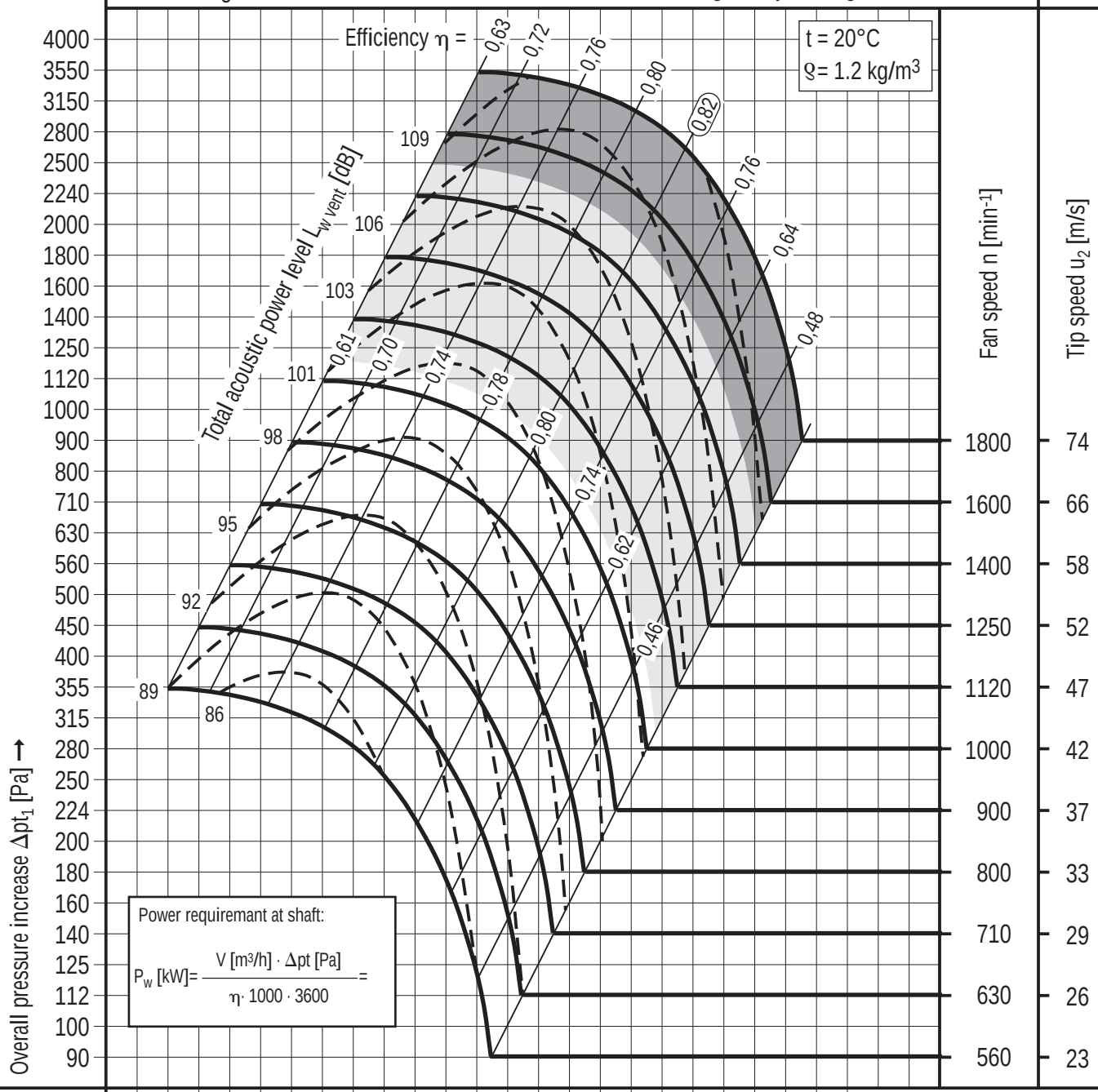

Volume flow rate* V [m³/h]	4 000	4 500	5 000	5 600	6 300	7 100	8 000	9 000	10 000	11 200	12 500	14 000	16 000	18 000	20 000	22 400	25 000	28 000	31 500	35 500	40 000	45 000	50 000	56 000				
Volume flow rate* V [m³/s]	1,12	1,25	1,4	1,6	1,8	2,0	2,24	2,5	2,8	3,15	3,55	4,0	4,5	5,0	5,6	6,3	7,1	8,0	9,0	10	11,2	12,5	14	16				
Flow velocity* c_2 [m/s]	2,0	2,24	2,5	2,8	3,15	3,55	4,0	4,5	5,0	5,6	6,3	7,1	8,0	9,0	10	11,2	12,5	14	16	18	20	22,4	25	28				
Dynamic pressure* pd [Pa]	2,5	3,15	4,0	5,0	6,3	8,0	10	12,5	16	20	25	31,5	40	50	63	80	100	125	160	200	250	315	400	500				

* Values rounded to standard figures

TLT-Turbo GmbH
Am Weinberg 68 · D-36251 Bad Hersfeld / Germany
Tel.: +49.6621.950-0 · Fax: +49.6621.950-100

CENTRIFUGAL VENTILATING FANS SINGLE INLET SINGLE WIDTH CHARACTERISTICS CURVES REH 900

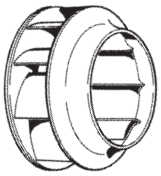

Max. adm. speed n = 1340 rpm
Moment of inertia J = 7.16 kgm²
Impeller diameter D_2 = 891 mm
Number of blades z = 9
Free discharge area F = 0.70 m²

No selection in this part
Fans with heavy-duty bearings ❽
Fans with light-duty bearings ❾

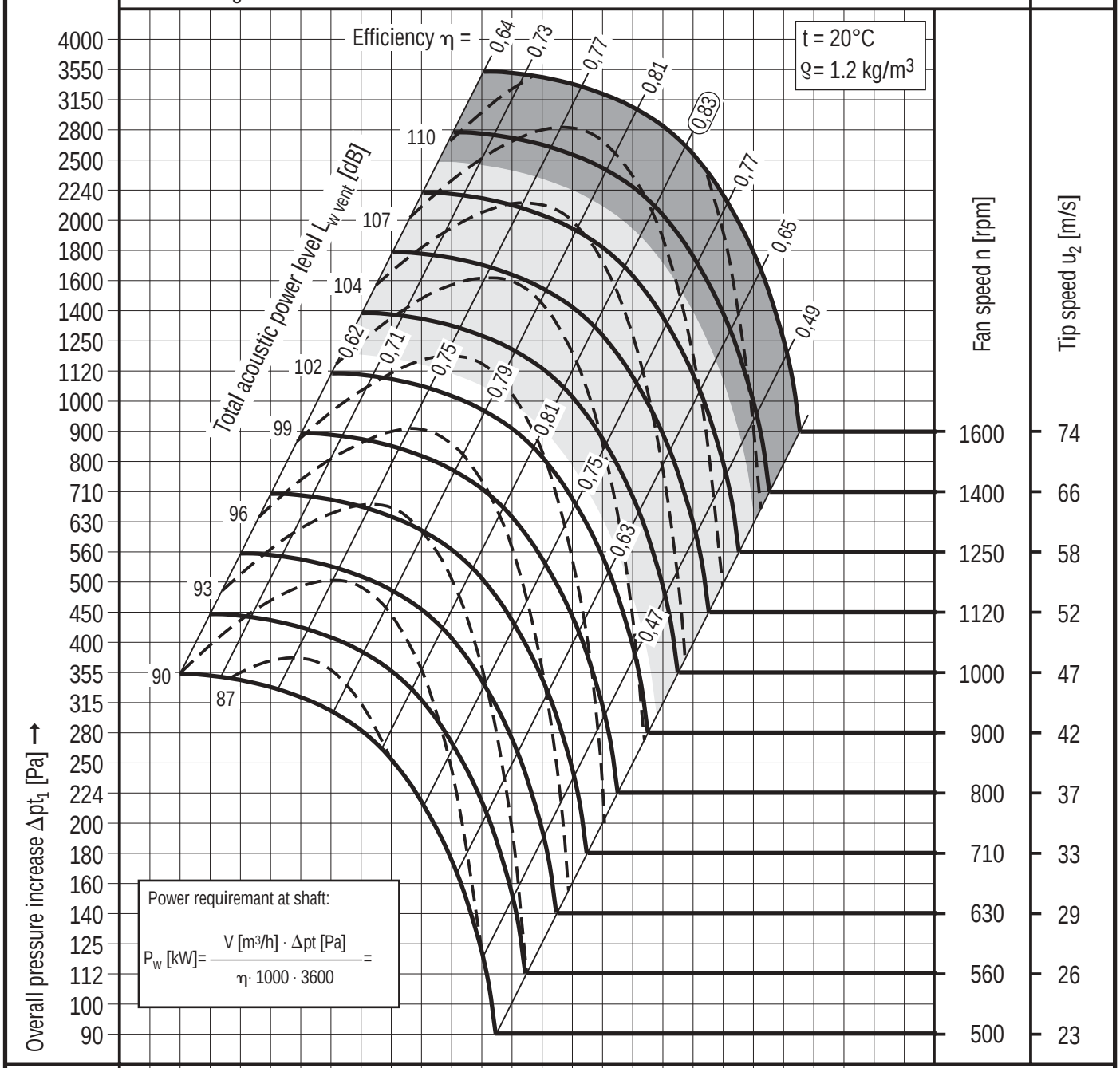

Volume flow rate* V [m³/h]	5 000	5 600	6 300	7 100	8 000	9 000	10 000	11 200	12 500	14 000	16 000	18 000	20 000	22 400	25 000	28 000	31 500	35 500	40 000	45 000	50 000	56 000	63 000	71 000	
Volume flow rate* V [m³/s]	1,4	1,6	1,8	2,0	2,24	2,5	2,8	3,15	3,55	4,0	4,5	5,0	5,6	6,3	7,1	8,0	9,0	10	11,2	12,5	14	16	18	20	
Flow velocity* c_2 [m/s]	2,0	2,24	2,5	2,8	3,15	3,55	4,0	4,5	5,0	5,6	6,3	7,1	8,0	9,0	10	11,2	12,5	14	16	18	20	22,4	25	28	
Dynamic pressure* pd [Pa]	2,5	3,15	4,0	5,0	6,3	8,0	10	12,5	16	20	25	31,5	40	50	63	80	100	125	160	200	250	315	400	500	

* Values rounded to standard figures

TLT-Turbo GmbH
Am Weinberg 68 · D-36251 Bad Hersfeld / Germany
Tel.: +49.6621.950-0 · Fax: +49.6621.950-100

CENTRIFUGAL VENTILATING FANS SINGLE INLET SINGLE WIDTH CHARACTERISTICS CURVES REH 1000

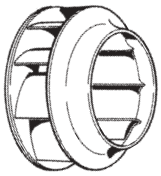

Max. adm. speed n = 1180 rpm
Moment of inertia J = 11.3 kgm²
Impeller diameter D_2 = 1000 mm
Number of blades z = 9
Free discharge area F = 0.88 m²

No selection in this part
Fans with heavy-duty bearings ❽
Fans with light-duty bearings ❾

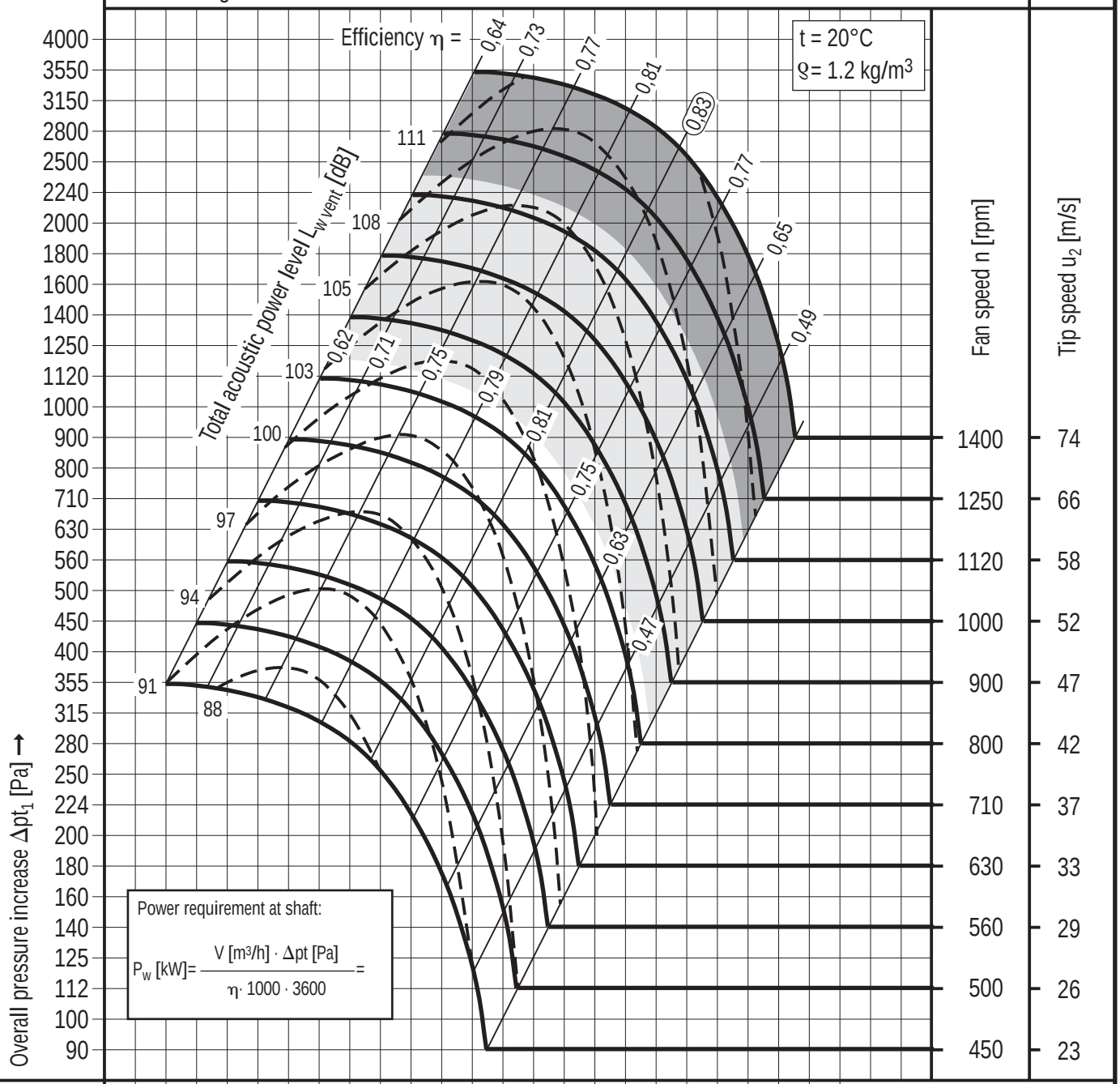

Volume flow rate* V [m³/h]	6 300	7 100	8 000	9 000	10 000	11 200	12 500	14 000	16 000	18 000	20 000	22 400	25 000	28 000	31 500	35 500	40 000	45 000	50 000	56 000	63 000	71 000	80 000	90 000			
Volume flow rate* V [m³/s]	1,8	2,0	2,24	2,5	2,8	3,15	3,55	4,0	4,5	5,0	5,6	6,3	7,1	8,0	9,0	10	11,2	12,5	14	16	18	20	22,4	25			
Flow velocity* c_2 [m/s]	2,0	2,24	2,5	2,8	3,15	3,55	4,0	4,5	5,0	5,6	6,3	7,1	8,0	9,0	10	11,2	12,5	14	16	18	20	22,4	25	28			
Dynamic pressure* pd [Pa]	2,5	3,15	4,0	5,0	6,3	8,0	10	12,5	16	20	25	31,5	40	50	63	80	100	125	160	200	250	315	400	500			

* Values rounded to standard figures

TLT-Turbo GmbH
Am Weinberg 68 · D-36251 Bad Hersfeld / Germany
Tel.: +49.6621.950-0 · Fax: +49.6621.950-100

CENTRIFUGAL VENTILATING FANS SINGLE INLET SINGLE WIDTH CHARACTERISTICS CURVES REH 1120

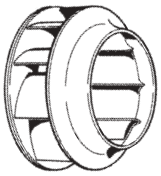

Max. adm. speed n = 1120 rpm
Moment of inertia J = 19.4 kgm²
Impeller diameter D_2 = 1120 mm
Number of blades z = 8
Free discharge area F = 0.80 m²

No selection in this part

Fans with heavy-duty bearings ❽

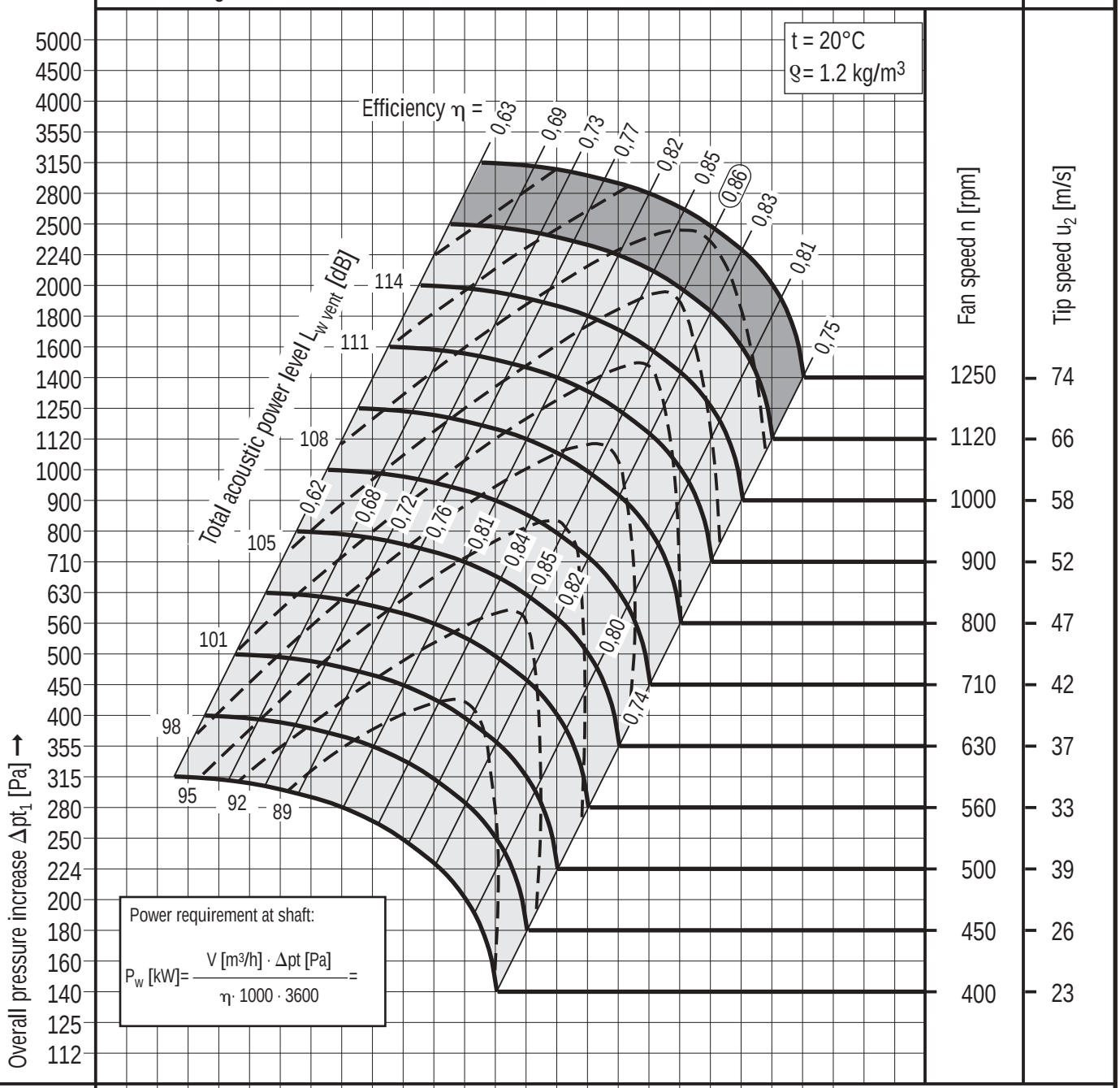

Volume flow rate* V [m³/h]	6 300	7 100	8 000	9 000	10 000	11 200	12 500	14 000	16 000	18 000	20 000	22 400	25 000	28 000	31 500	35 500	40 000	45 000	50 000	56 000	63 000	71 000	80 000	90 000		
Volume flow rate* V [m³/s]	1,8	2,0	2,24	2,5	2,8	3,15	3,55	4,0	4,5	5,0	5,6	6,3	7,1	8,0	9,0	10	11,2	12,5	14	16	18	20	22,4	25		
Flow velocity* c_2 [m/s]	2,24	2,5	2,8	3,15	3,55	4,0	4,5	5,0	5,6	6,3	7,1	8,0	9,0	10	11,2	12,5	14	16	18	20	22,4	25	28	31,5		
Dynamic pressure* pd [Pa]	2,8	3,55	4,5	5,6	7,1	9,0	11,2	14	18	22,4	28	35,5	45	56	71	90	112	140	180	224	280	355	450	560		

* Values rounded to standard figures

TLT-Turbo GmbH
Am Weinberg 68 · D-36251 Bad Hersfeld / Germany
Tel.: +49.6621.950-0 · Fax: +49.6621.950-100

CENTRIFUGAL VENTILATING FANS SINGLE INLET SINGLE WIDTH CHARACTERISTICS CURVES REH 1250

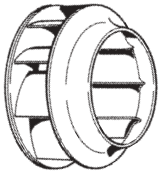

Max. adm. speed n = 1000 rpm
Moment of inertia J = 30 kgm²
Impeller diameter D_2 = 1250 mm
Number of blades z = 8
Free discharge area F = 1.01 m²

No selection in this part

Fans with heavy-duty bearings ❽

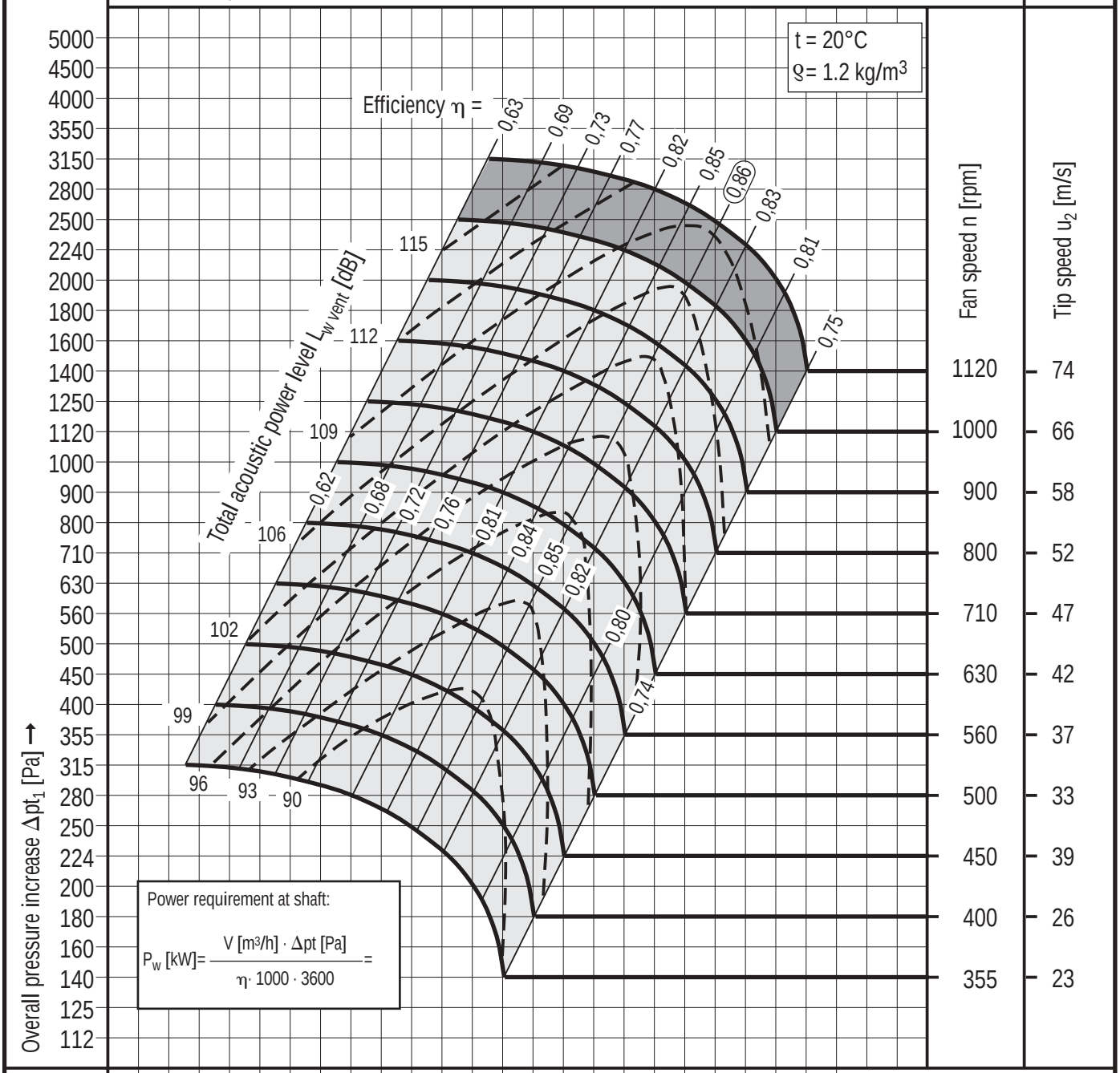

Volume flow rate* V m³/h]	8 000	9 000	10 000	11 200	12 500	14 000	16 000	18 000	20 000	22 400	25 000	28 000	31 500	35 500	40 000	45 000	50 000	56 000	63 000	71 000	80 000	90 000	100 000	112 000			
Volume flow rate* V [m³/s]	2,24	2,5	2,8	3,15	3,55	4,0	4,5	5,0	5,6	6,3	7,1	8,0	9,0	10	11,2	12,5	14	16	18	20	22,4	25	28	31,5			
Flow velocity* c_2 [m/s]	2,24	2,5	2,8	3,15	3,55	4,0	4,5	5,0	5,6	6,3	7,1	8,0	9,0	10	11,2	12,5	14	16	18	20	22,4	25	28	31,5			
Dynamic pressure* pd [Pa]	2,8	3,55	4,5	5,6	7,1	9,0	11,2	14	18	22,4	28	35,5	45	56	71	90	112	140	180	224	280	355	450	560			

* Values rounded to standard figures

TLT-Turbo GmbH
Am Weinberg 68 · D-36251 Bad Hersfeld / Germany
Tel.: +49.6621.950-0 · Fax: +49.6621.950-100

CENTRIFUGAL VENTILATING FANS SINGLE INLET SINGLE WIDTH CHARACTERISTICS CURVES REH 1400

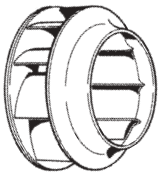

Max. adm. speed n = 900 rpm
Moment of inertia J = 63 kgm²
Impeller diameter D_2 = 1400 mm
Number of blades z = 8
Free discharge area F = 1.25 m²

No selection in this part

Fans with heavy-duty bearings ❽

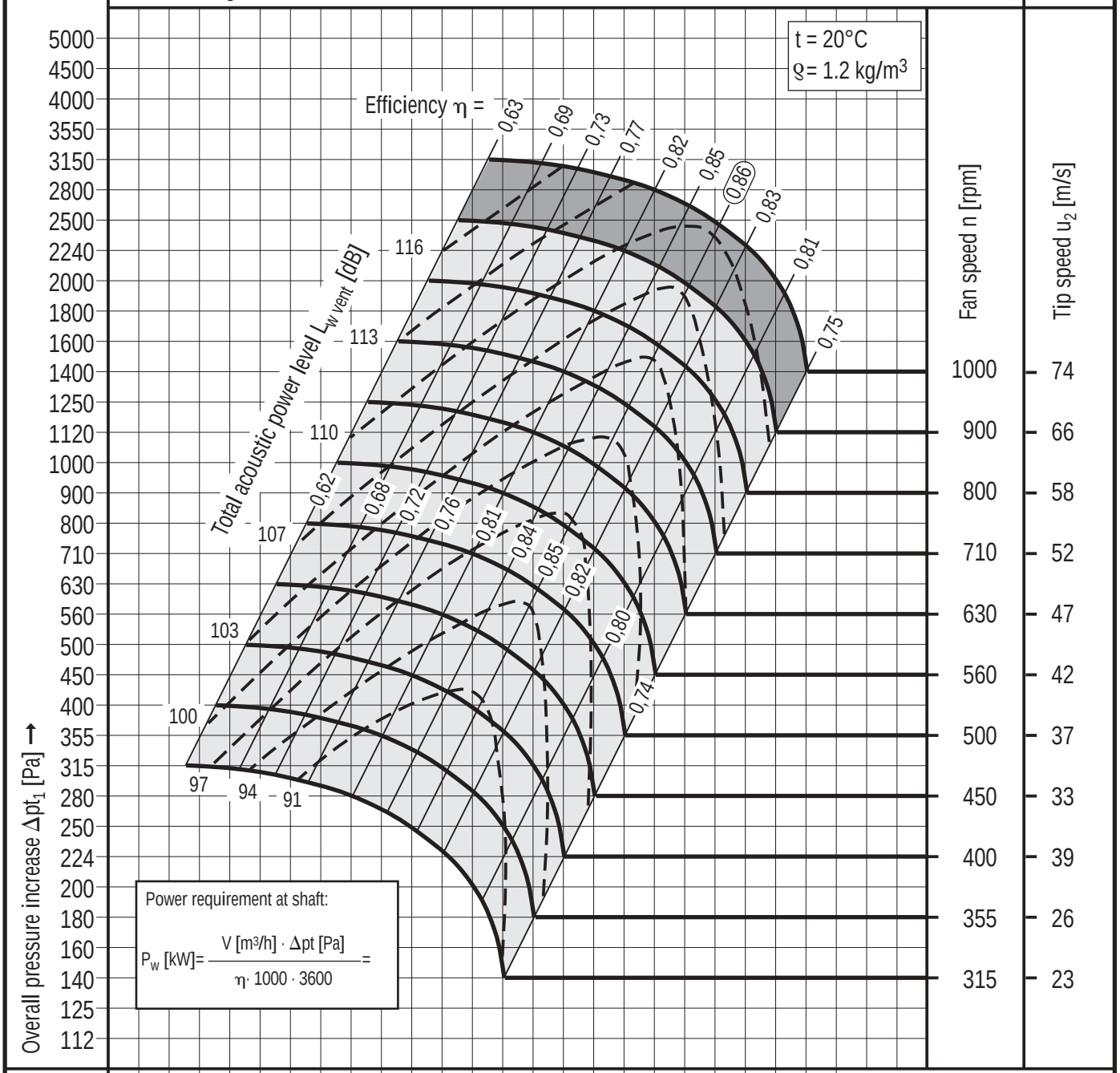

Volume flow rate* V [m³/h]	10 000	11 200	12 500	14 000	16 000	18 000	20 000	22 400	25 000	28 000	31 500	35 500	40 000	45 000	50 000	56 000	63 000	71 000	80 000	90 000	100 000	112 000	125 000	140 000	
Volume flow rate* V [m³/s]	2,8	3,15	3,55	4,0	4,5	5,0	5,6	6,3	7,1	8,0	9,0	10	11,2	12,5	14	16	18	20	22,4	25	28	31,5	35,5	40	
Flow velocity* c_2 [m/s]	2,24	2,5	2,8	3,15	3,55	4,0	4,5	5,0	5,6	6,3	7,1	8,0	9,0	10	11,2	12,5	14	16	18	20	22,4	25	28	31,5	
Dynamic pressure* pd [Pa]	2,8	3,55	4,5	5,6	7,1	9,0	11,2	14	18	22,4	28	35,5	45	56	71	90	112	140	180	224	280	355	450	560	

* Values rounded to standard figures

TLT-Turbo GmbH
Am Weinberg 68 · D-36251 Bad Hersfeld / Germany
Tel.: +49.6621.950-0 · Fax: +49.6621.950-100

CENTRIFUGAL VENTILATING FANS SINGLE INLET SINGLE WIDTH CHARACTERISTICS CURVES REH 1600

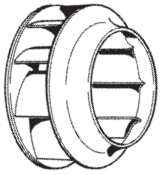

Max. aEUR.speed n = 800 rpm
Moment of inertia J = 128 kgm²
Impeller diameter D_2 = 1600 mm
Number of blades z = 8
Free discharge area F = 1.57 m²

No selection in this part

Fans with heavy-duty bearings ❽

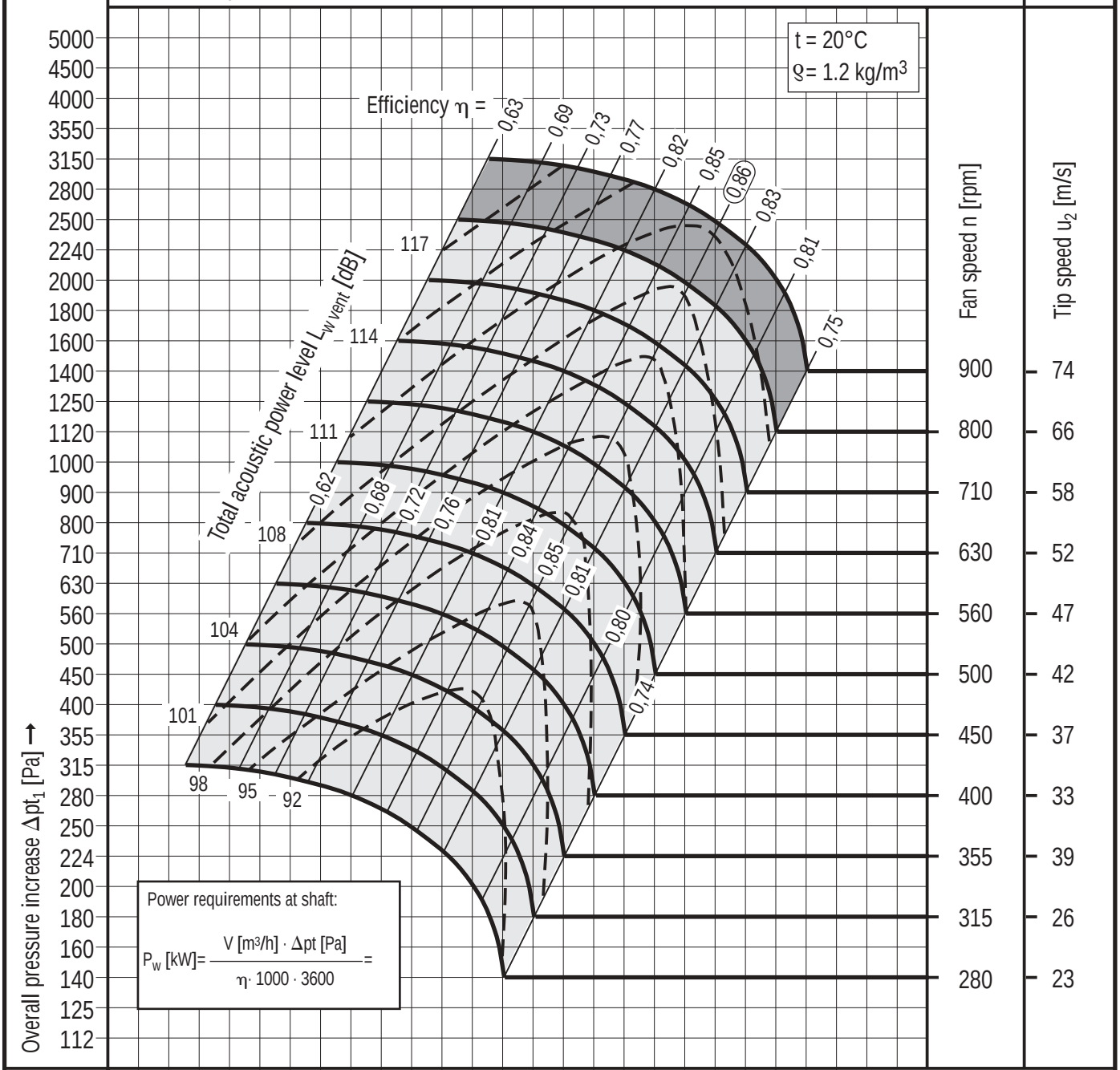

Volume flow rate* V [m³/h]	12 500	14 000	16 000	18 000	20 000	22 400	25 000	28 000	31 500	35 500	40 000	45 000	50 000	56 000	63 000	71 000	80 000	90 000	100 000	112 000	125 000	140 000	160 000	180 000
Volume flow rate* V [m³/s]	3,55	4,0	4,5	5,0	5,6	6,3	7,1	8,0	9,0	10	11,2	12,5	14	16	18	20	22,4	25	28	31,5	35,5	40	45	50
Flow velocity* c_2 [m/s]	2,24	2,5	2,8	3,15	3,55	4,0	4,5	5,0	5,6	6,3	7,1	8,0	9,0	10	11,2	12,5	14	16	18	20	22,4	25	28	31,5
Dynamic pressure* pd [Pa]	2,8	3,55	4,5	5,6	7,1	9,0	11,2	14	18	22,4	28	35,5	45	56	71	90	112	140	180	224	280	355	450	560

* Values rounded to standard figures

Item No.	Qty.	Description	Unit price EUR	Unit price Cts	Total EUR	Total Cts
		Carryover				
		Centrifugal Ventilating Fan (Size 400 – 1000)REH Series, Single Inlet Single Width **V-belt driven** – Impeller made of sheet steel, welded construction, with backward curved blades, surface finished with a protective polyester powder coating, colour RAL 7030 – Impeller assembly (impeller, grey cast iron screw-on hub with taperlock steel clamping bush, true-running shaft) statically and dynamically balanced in assembled state, minimum balance quality Q 2.5 per VDI 2060 – Shaft end with keyway and parallel key per DIN 6885/1, shaft with protective Tectyl coating – Bearing configuration: • Deep-groove ball bearing (re-greasable), non-split RASE type,maintenance free low-noise design rated for a service life of approx. 20000 operating hours, mounted on a sturdy bearing pedestal or • Self-aligning ball or roller bearing (re-greasable when stationary, or in service via a suitable greasing system), supported in a split cast-iron pillow block, rated for a calculated service life of approx. 30000 operating hours, mounted on a sturdy bearing pedestal. – Outlet frame as per DIN 24193/3 (Euro standard) – Spiral-type fan casing, welded construction with rugged reinforcing frame and bolt-on baseframe sections, surface finished with a protective 1-component synthetic paint coating, colour RAL 7030 (stone grey) **Specifications:** Volume flow rate m^3/h Temperature °C Overall pressure increase Pa Dynamic pressure Pa Fan speed rpm Efficiency % Power requirement at shaft kW Total acoustic power level dB Motor output kW Motor speed rpm Motor current rating A Voltage Volt Frequency Hz Weight kg **Manufacturer: TLT-Turbo GmbH** **Type: REH ……** **For accessories see tender texts on page 041**				
		Carryover				

Item No.	Qty.	Description	Unit price EUR	Unit price Cts	Total EUR	Total Cts
		Carryover				
		Centrifugal Ventilating Fan (Size 1120 – 1600) **REH Series, Single Inlet Single Width** **V-belt driven**				
		– Impeller made of sheet steel, welded construction, with backward curved blades, surface finished with a protective synthetic coating, colour RAL 7030				
		– Impeller assembly (impeller, grey cast iron weld-in hub with taperlock steel clamping bush, true-running shaft) statically and dynamically balanced in assembled state, minimum balance quality Q 2.5 per VDI 2060				
		– Shaft end with keyway and parallel key per DIN 6885/1, shaft with protective Tectyl coating				
		– Bearing configuration: Self-aligning ball or roller bearing (re-greasable when stationary, or in service via a suitable greasing system), supported in a split cast-iron pillow block, rated for a service life of approx. 30000 operating hours, mounted on a sturdy bearing pedestal.				
		– Outlet frame per DIN 24193/2 (Euro standard) and frame base structure integrated into the casing				
		– Fan casing, sturdy welded construction, split in one or two planes, casing sidewalls with reinforcing grating, finished with 1-component synthetic paint coating, colour RAL 7030 (stone grey)				
		Specifications:				
		Volume flow rate m^3/h				
		Temperature °C				
		Overall pressure increase Pa				
		Dynamic pressure Pa				
		Fan speed rpm				
		Efficiency %				
		Power requirement at shaft kW				
		Total acoustic power level dB				
		Motor output kW				
		Motor speed rpm				
		Motor current rating A				
		Voltage Volt				
		Frequency Hz				
		Weight kg				
		Manufacturer: TLT-Turbo GmbH				
		Type: REH ……				
		For accessories see tender texts on page 041				
		Carryover				

Item No.	Qty.	Description	Unit price EUR	Unit price Cts	Total EUR	Total Cts
		Carryover				
		Accessories for belt-driven REH centrifugal fans				
		– Baseframe made of torsion-resistant sectional steel, ready for fan and motor installation, with belt tensioning device				
		– Matching flange (Outlet side)				
		– Matching flange (Inlet side)				
		– Flexible connection (Outlet & Inlet side)				
		– Inspection hatch				
		– Inspection hatch, industrial type				
		– Condensate drain				
		– Vibration isolator set (spring or rubber type)				
		– Inlet guard, in 2 parts				
		– Shaft guard				
		– V-belt drive				
		– V-belt guard (fully enclosed)				
		– Lubrication line				
		– Enhanced spark protection				
		– RPM sensor orifice in belt guard casing				
		– Three-phase a.c. motor, ICE standard series, foot-mounted type, protection class IP				
		– Thermal and noise insulation for the fan casing, noise attenuation __ dB				
		– Thermal and noise insulation, protective hood type, noise attenuation				
		Carryover				

Item No.	Qty.	Description	Unit price EUR	Unit price Cts	Total EUR	Total Cts
		Carryover				
		Centrifugal Ventilating Fan (Size 400 – 1600) **REH Series, Single Inlet Single Width** **with Direct Drive** – Impeller made of sheet steel, welded construction, with backward curved blades, surface finished with a protective polyester powder coating, colour RAL 7030 (stone grey) – Impeller (sizes 400 – 1000) Impeller assembly (impeller, grey cast iron screw-on hub with taperlock steel clamping bush, true-running shaft) statically and dynamically balanced in assembled state, minimum balance quality Q 2.5 per VDI 2060 – Impeller (sizes 1120 – 1600) Impeller assembly (impeller, grey cast iron weld-in hub with taperlock steel clamping bush, true-running shaft) statically and dynamically balanced in assembled state, minimum balance quality Q 2.5 per VDI 2060 – Outlet frame per DIN 24193/2 (Euro standard) and frame base structure integrated into the casing – Fan casing, sturdy welded construction, split in one or two planes, casing sidewalls with reinforcing grating, surface finished with 1-component synthetic paint coating, colour RAL 7030 (stone grey – Motor pedestal, sturdy welded construction, bolted to the fan casing **Specifications:** Volume flow rate — m^3/h Temperature — °C Overall pressure increase — Pa Dynamic pressure — Pa Fan speed — rpm Efficiency — % Power requirement at shaft — kW Total acoustic power level — dB Motor output — kW Motor speed — rpm Motor current rating — A Voltage — Volt Frequency — Hz Weight — kg **Manufacturer: TLT-Turbo GmbH** **Type: REH ……** **For accessories see tender texts on page 043**				
		Carryover				

Item No.	Qty.	Description	Unit price EUR	Unit price Cts	Total EUR	Total Cts
		Carryover				
		Accessories for direct-driven REH Series centrifugal fans – Baseframe made of torsion-resistant sectional steel, ready for fan and motor with motor pedestal installation – Matching flange (Inlet side) – Flexible connection (Outlet & Inlet side) – Inspection hatch – Inspection hatch, industrial type – Condensate drain – Vibration isolater set (spring or rubber type) – Enhanced spark protection – Three-phase a.c. motor, ICE standard series, foot-mounted type, protection class IP ____ – Thermal and noise insulation for the fan casing, noise attenuation __ dB – Thermal and noise insulation, protective hood type, noise attenuation __ dB				
		Carryover				

TLT-Turbo GmbH
Am Weinberg 68 · D-36251 Bad Hersfeld / Germany
Tel.: +49.6621.950-0 · Fax: +49.6621.950-100

CENTRIFUGAL VENTILATING FANS
RZH SERIES – DOUBLE INLET DOUBLE WIDTH
MAIN DIMENSIONS
SIZES 400 – 630 R38 R39

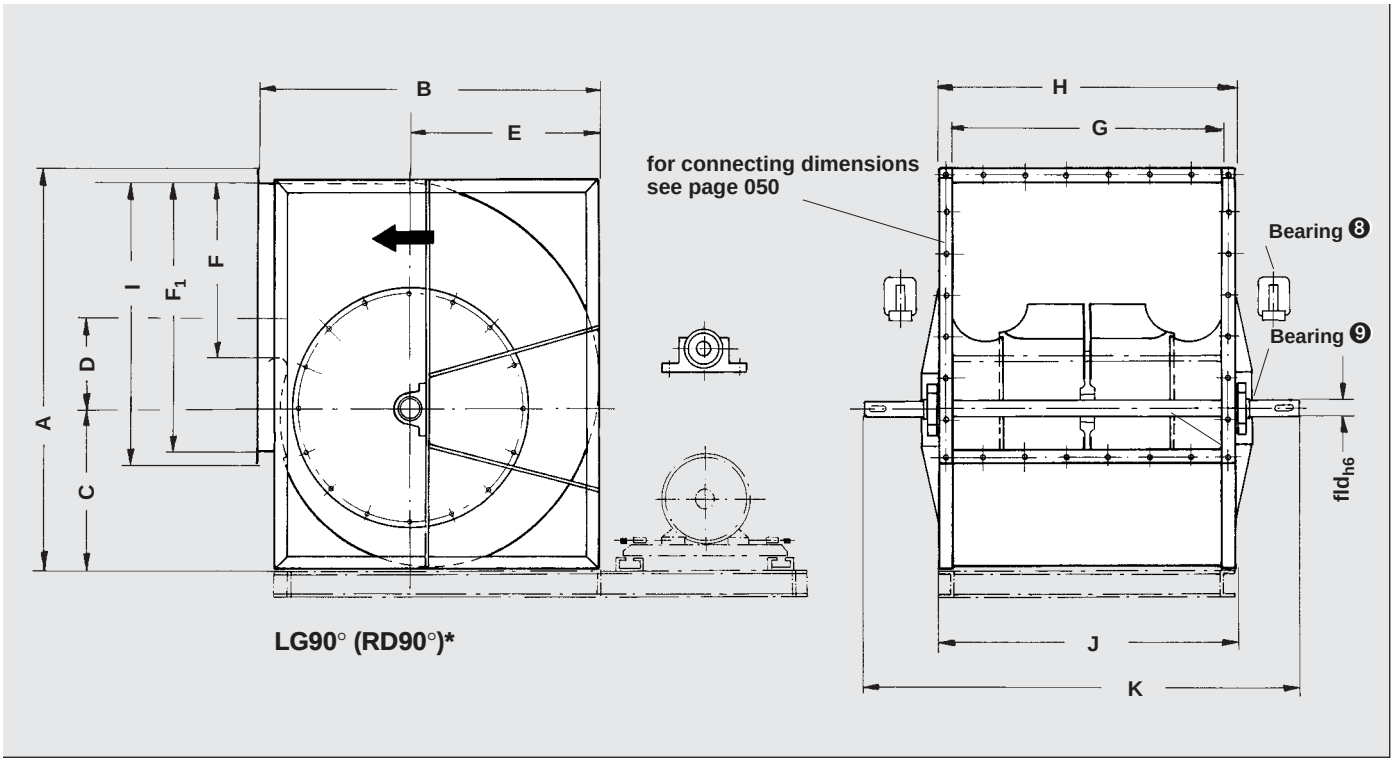

Casing position LG0° (RD0°)* **LG 180° (RD 180°)*** **LG 270° (RD 270°)***

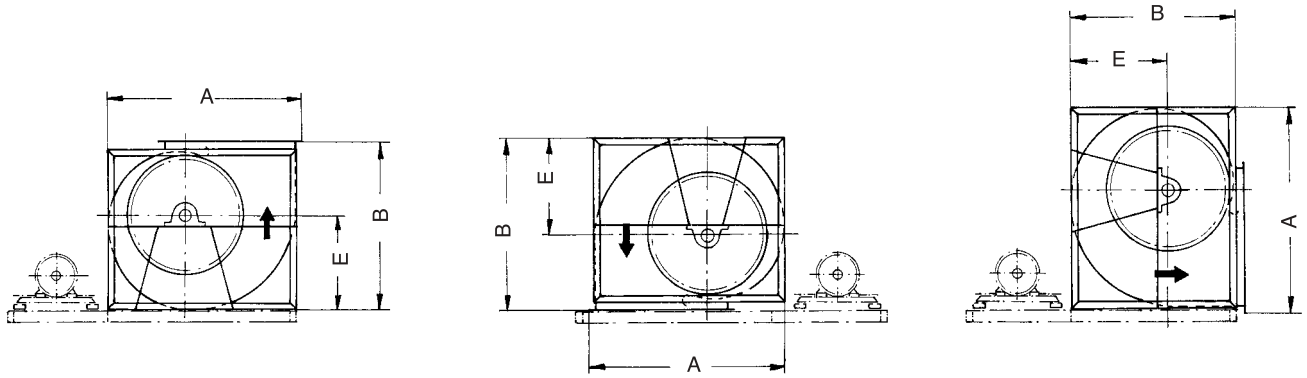

Illustrations show bearing configuration ❾ With bearing configuration ❽, all bearings are mounted horizontally regardless of the casing position.

Size	A	B	C	D	E	F	F1	G	H	I	J	K	fld_{h6}		kg 1) (approx.)
400	776	670	306	179	369	340	502	502	582	582	578	822	30		55
450	874	755	351	202	410	380	562	562	642	642	642	930	30		75
500	957	827	380	221	457	425	632	632	712	712	708	1050	40		100
560	1070	920	427	247	509	477	712	712	792	792	784	1080	40		125
												*1180	50		
630	1211	1026	479	291	574	550	802	802	882	882	878	1200	40		160
												*1250	50		

1) Without motor / without baseframe
Without V-belt drive

*Mirror-inverted casing position

Dimensional and design changes reserved.

*Motor sizes 200 + 225 only. Dimensions in mm

TLT-Turbo GmbH
Am Weinberg 68 · D-36251 Bad Hersfeld / Germany
Tel.: +49.6621.950-0 · Fax: +49.6621.950-100

CENTRIFUGAL VENTILATING FANS
RZH SERIES – DOUBLE INLET DOUBLE WIDTH
BASEFRAME DIMENSIONS
SIZES 400 – 630

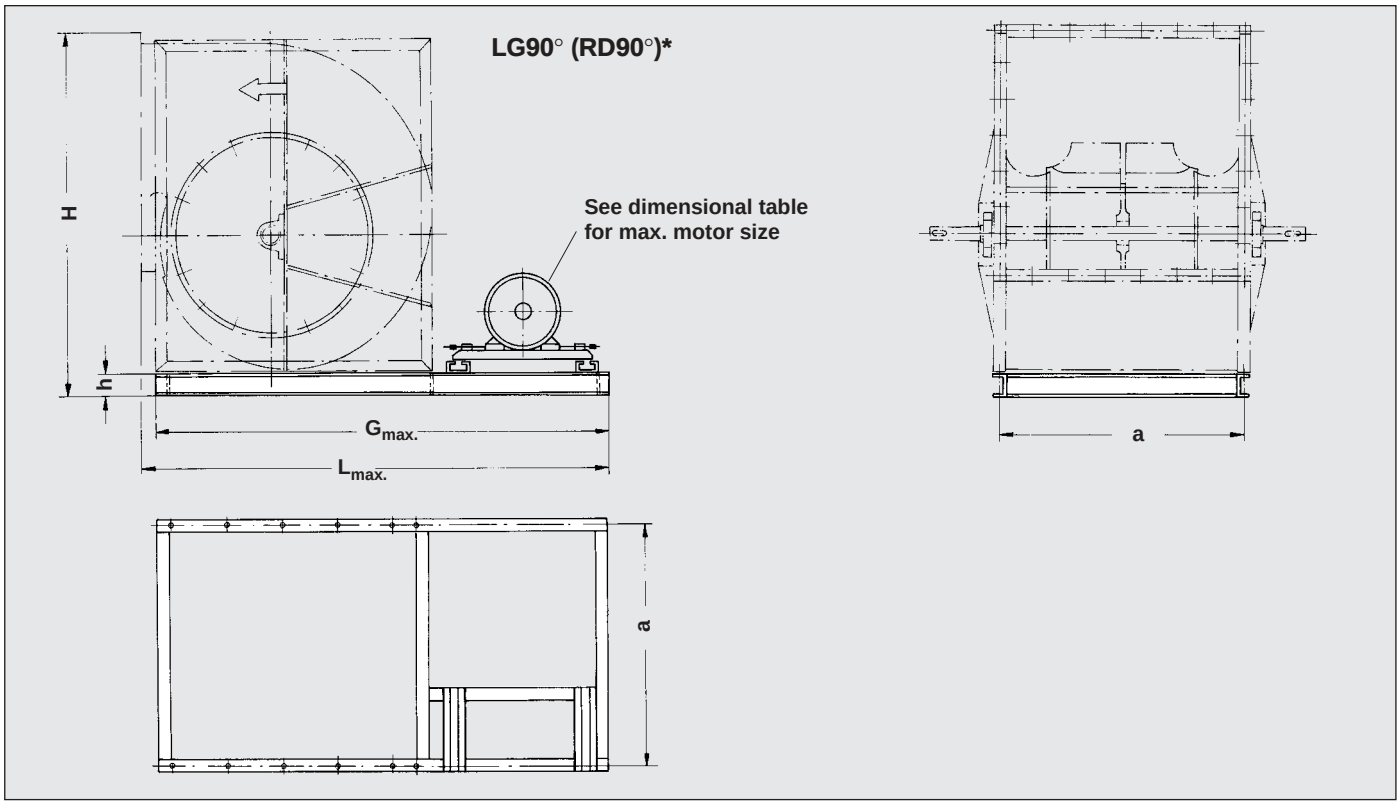

Casing position LG0° (RD0°)*

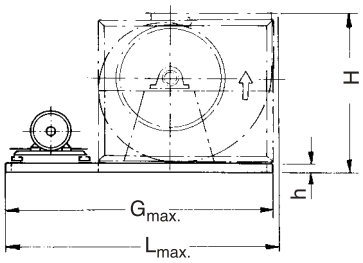

LG 180° (RD 180°)*

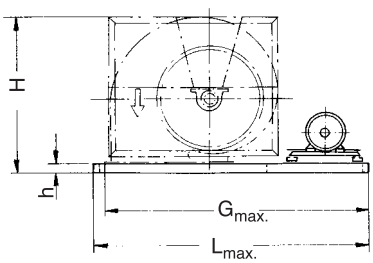

LG 270° (RD 270°)*

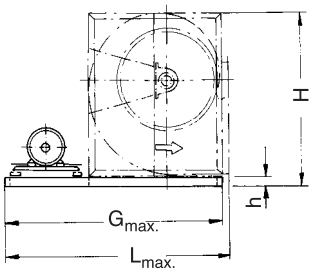

Size	Motor size	LG 0° / RD 0°			LG 90° + 270° / RD 90° + 270°			LG 180° / RD 180°			a	h	kg (approx.)
		$L_{max.}$	$G_{max.}$	H	$L_{max.}$	$G_{max.}$	H	$L_{max.}$	$G_{max.}$	H			
400	90-132	1500	1455	735	1400	1355	841	upon request		735	546	65	32
	160-180	1630	1585	750	1500	1455	856			750	546	80	40
450	100-132	1550	1505	820	1450	1405	939			820	612	65	34
	160-180	1680	1635	835	1500	1455	954			835	612	80	44
	200	1780	1735	855	1600	1555	974			855	612	100	53
500	100-132	1650	1605	892	1550	1505	1022			892	680	65	36
	160-180	1780	1735	907	1650	1605	1037			907	680	80	47
	200	1880	1835	927	1750	1705	1057			927	680	100	57
560	112-132	1750	1705	1000	1650	1605	1150			1000	756	80	48
	160-180	1880	1835	1020	1750	1705	1170			1020	756	100	61
	200-225	1980	1935	1060	1850	1805	1210			1060	756	140	87
630	112-132	1880	1835	1106	1750	1705	1291			1106	846	80	54
	160-180	2050	2005	1126	1900	1855	1311			1126	846	100	70
	200-225	2150	2105	1166	2000	1955	1351			1166	846	140	96

*Mirror-inverted casing position

Dimensional and design changes reserved.

Dimensions in mm

TLT-Turbo GmbH
Am Weinberg 68 · D-36251 Bad Hersfeld / Germany
Tel.: +49.6621.950-0 · Fax: +49.6621.950-100

CENTRIFUGAL VENTILATING FANS
RZH SERIES – DOUBLE INLET DOUBLE WIDTH
MAIN DIMENSIONS
SIZES 710 – 1000 R38 R39

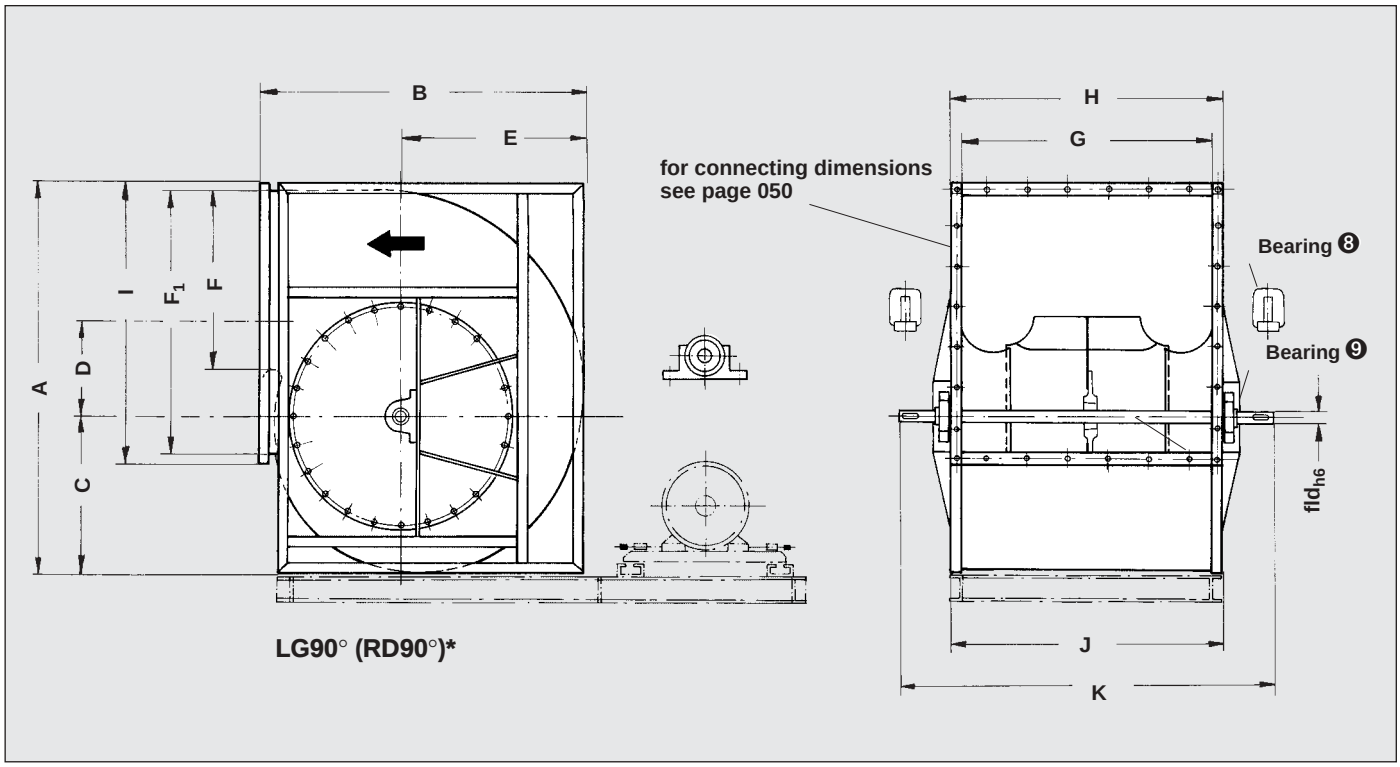

Casing position LG0° (RD0°)*

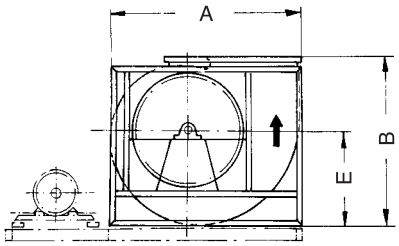

LG 180° (RD 180°)*

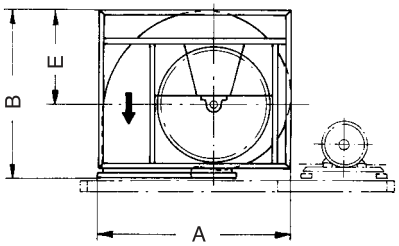

LG 270° (RD 270°)*

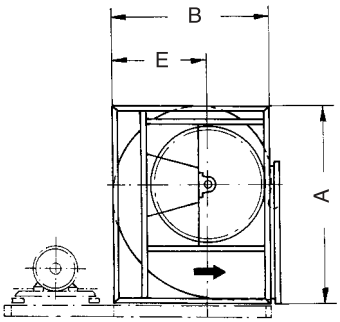

Illustrations show bearing configuration ❾ With bearing configuration ❽, all bearings are mounted horizontally regardless of the casing position.

Size	A	B	C	D	E	F	F1	G	H	I	J	K	fld_{h6}		kg 1) (approx.)
710	1343	1152	539	313	647	600	899	899	983	983	984	1397	50		240
800	1505	1290	604	359	727	673	999	999	1083	1083	1084	1497	50		290
900	1702	1443	674	407	811	755	1119	1119	1243	1243	1224	1650	60		390
1000	1871	1577	746	438	894	848	1249	1249	1373	1373	1364	1786	60		520

1) Without motor / without baseframe
Without V-belt drive

*Mirror-inverted casing position

Dimensional and design changes reserved.

Dimensions in mm

TLT-Turbo GmbH
Am Weinberg 68 · D-36251 Bad Hersfeld / Germany
Tel.: +49.6621.950-0 · Fax: +49.6621.950-100

CENTRIFUGAL VENTILATING FANS
RZH SERIES – DOUBLE INLET DOUBLE WIDTH
BASEFRAME DIMENSIONS
SIZES 710 – 1000

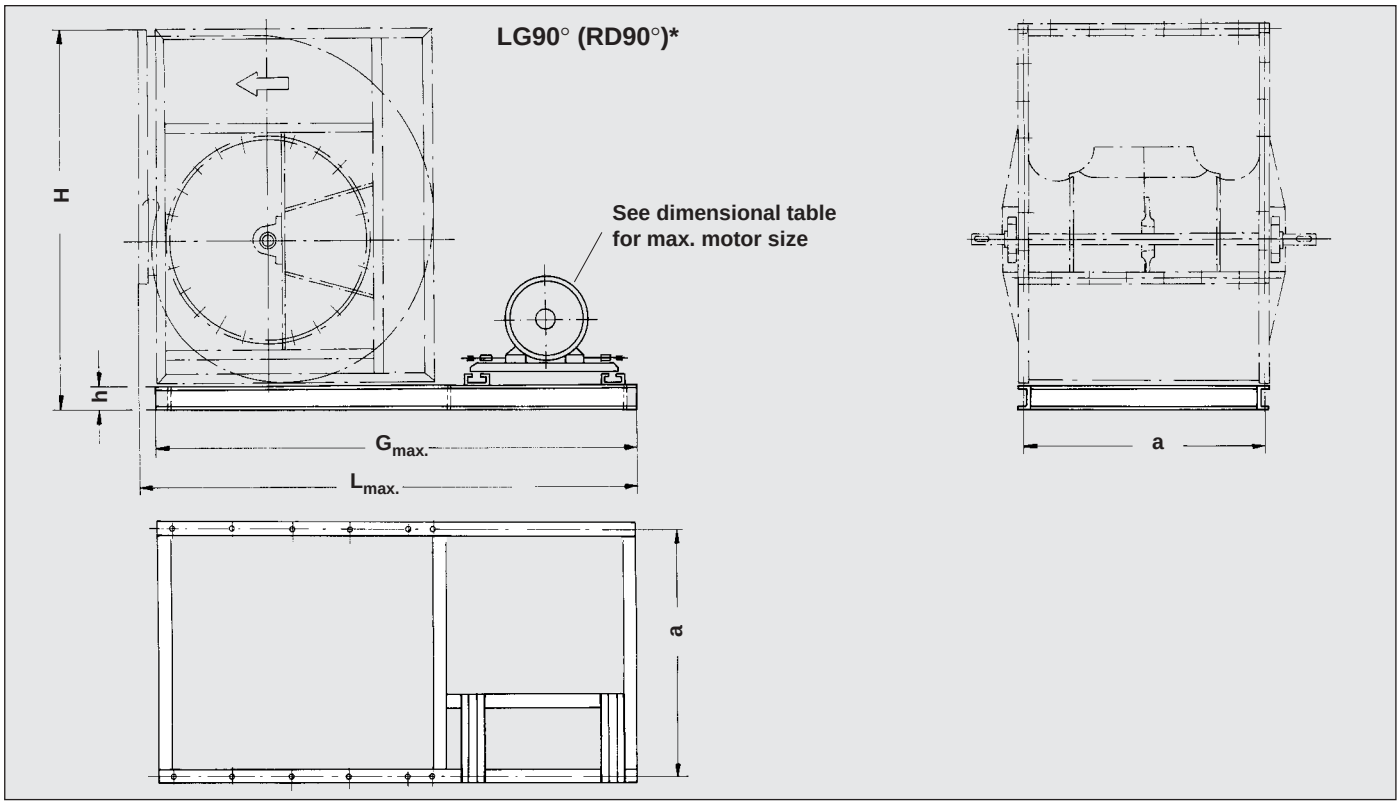

Casing position LG0° (RD0°)*

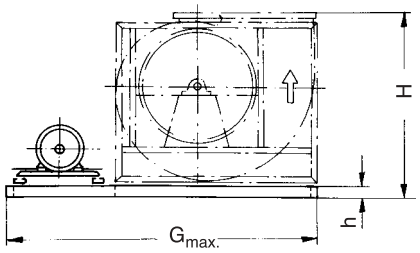

LG 180° (RD 180°)*

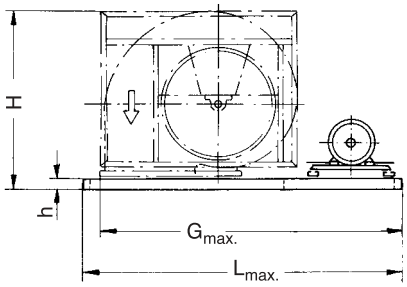

LG 270° (RD 270°)*

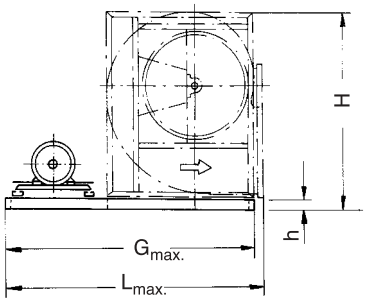

Size	Motor size	LG 0° / RD 0°		LG 90° + 270° / RD 90° + 270°			LG 180° / RD 180°			a	h	kg (approx.)
		$G_{max.}$	H	$L_{max.}$	$G_{max.}$	H	$L_{max.}$	$G_{max.}$	H			
710	112-160	2000	1252	1900	1845	1443	upon request		1252	948	100	80
	180-225	2200	1292	2000	1945	1483			1392	948	140	120
800	112-160	2200	1390	2100	2025	1605			1390	1050	100	85
	180-225	2400	1430	2400	2325	1645			1430	1050	140	130
	250	2600	1470	2600	2525	1685			1470	1050	180	180
900	132-160	2400	1543	2200	2135	1802			1543	1184	100	95
	180-225	2600	1583	2400	2335	1842			1583	1184	140	140
	250	2800	1623	2600	2535	1882			1623	1184	180	195
1000	132-160	2600	1677	2400	2330	1971			1677	1314	100	105
	180-225	2800	1717	2600	2530	2011			1717	1314	140	160
	250-280	3000	1757	2800	2730	2051			1757	1314	180	220

*Mirror-inverted casing position

Dimensional and design changes reserved.

Dimensions in mm

TLT-Turbo GmbH
Am Weinberg 68 · D-36251 Bad Hersfeld / Germany
Tel.: +49.6621.950-0 · Fax: +49.6621.950-100

CENTRIFUGAL VENTILATING FANS
RZH SERIES – DOUBLE INLET DOUBLE WIDTH
MAIN DIMENSIONS
SIZES 1120 – 1600 R38

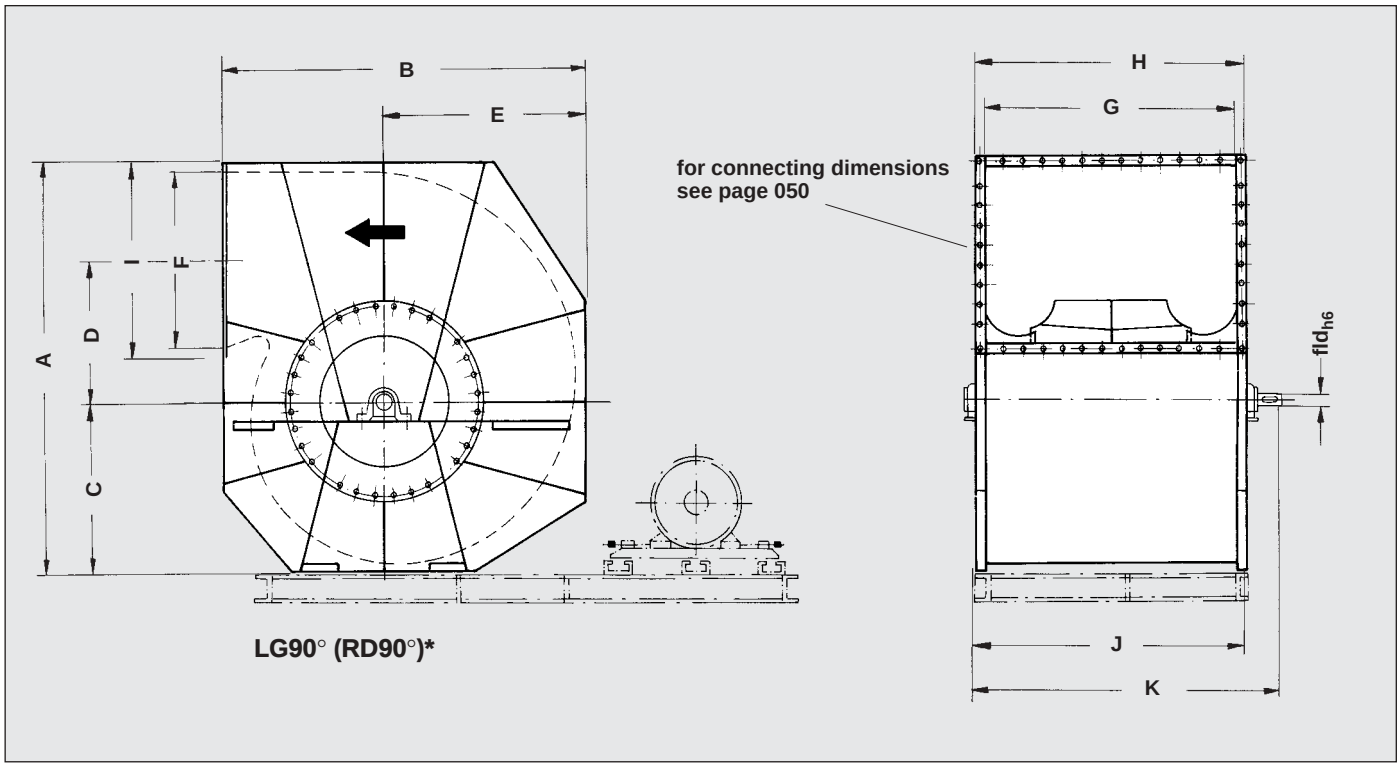

Casing position LG0° (RD0°)*

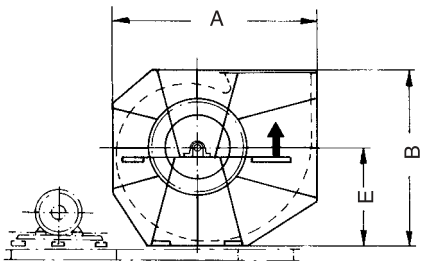

LG 180° (RD 180°)*

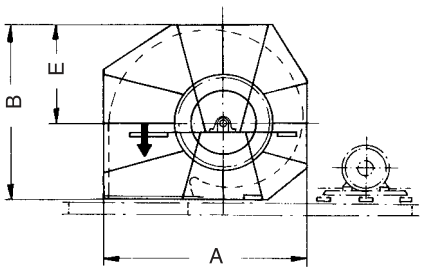

LG 270° (RD 270°)*

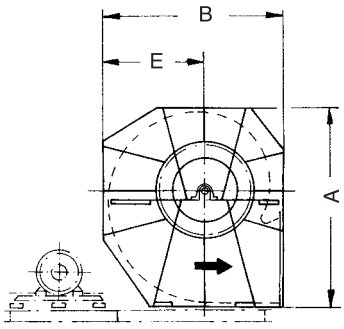

Size	A	B	C	D	E	F	G	H	I	J	K	fld_{h6}		kg 1) (approx.)
1120	2350	2072	974	813	1162	1002	1402	1522	1122	1530	1750	65		855
1250	2625	2320	1088	911	1297	1122	1602	1728	1248	1730	1969	70		1200
1400	2930	2600	1218	1023	1455	1252	1802	1928	1378	1970	2240	90		1890
1600	3269	2896	1357	1148	1611	1402	2002	2128	1528	2170	2430	100		2180

1) Without motor / without baseframe
Without V-belt drive

*Mirror-inverted casing position

Dimensional and design changes reserved.

Dimensions in mm

TLT-Turbo GmbH
Am Weinberg 68 · D-36251 Bad Hersfeld / Germany
Tel.: +49.6621.950-0 · Fax: +49.6621.950-100

CENTRIFUGAL VENTILATING FANS
RZH SERIES – DOUBLE INLET DOUBLE WIDTH
BASEFRAME DIMENSIONS
SIZES 1120 – 1600

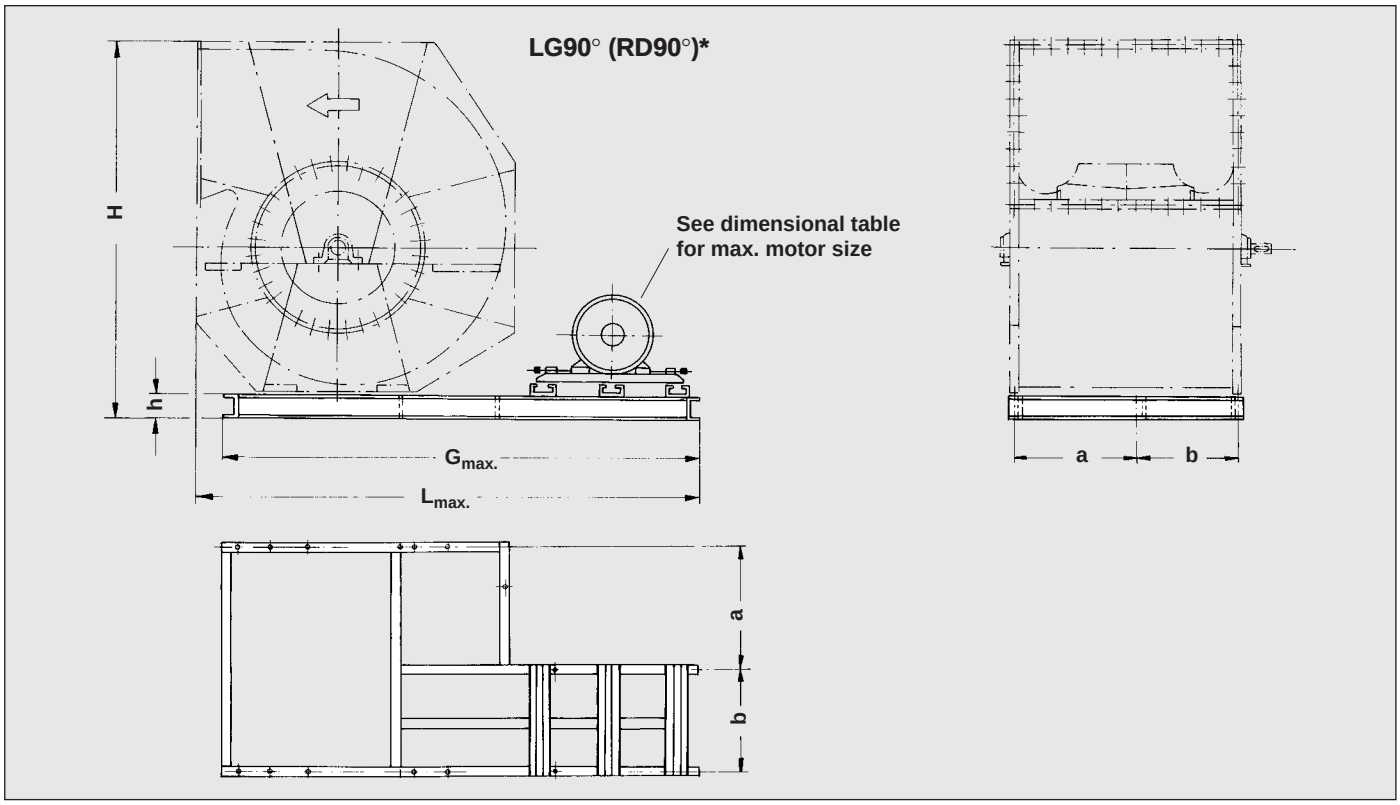

Casing position LG0° (RD0°)*

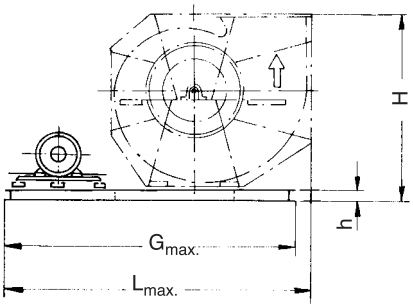

LG 180° (RD 180°)*

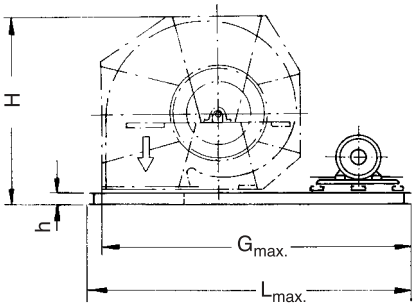

LG 270° (RD 270°)*

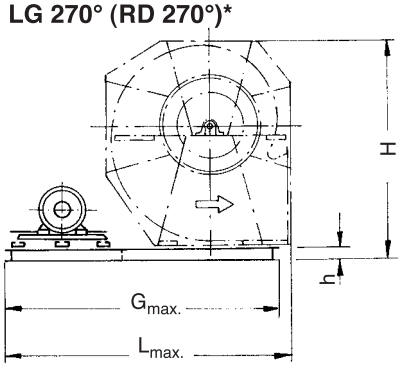

Size	Motor size	LG 0° / RD 0°			LG 90° + 270° / RD 90° + 270°			LG 180° / RD 180°			a	b	h	kg (approx.)
		$L_{max.}$	$G_{max.}$	H	$L_{max.}$	$G_{max.}$	H	$L_{max.}$	$G_{max.}$	H				
1120	132-180	3200	3100	2212	2900	2770	2490	upon request		2212	767	711	140	230
	200-250	3400	3300	2232	3200	3070	2510			2232	767	711	160	270
	280	3500	3400	2252	3300	3170	2530			2252	767	711	180	315
1250	132-180	3500	3370	2460	3200	3070	2765			2460	980	700	140	250
	200-250	3700	3570	2480	3400	3270	2785			2480	980	700	160	295
	280-315	3800	3770	2500	3600	3470	2805			2500	980	700	180	345
1400	200-250	4000	3870	2780	3700	3570	3110			2780	995	905	180	370
	280-355	4300	4170	2800	4000	3870	3130			2800	995	905	200	420
1600	200-250	4400	4270	3076	4100	3970	3449			3076	1195	905	180	400
	280-355	4700	4570	3096	4400	4270	3469			3096	1195	905	200	455

*Mirror-inverted casing position

Dimensional and design changes reserved.

Dimensions in mm

TLT-Turbo GmbH
Am Weinberg 68 · D-36251 Bad Hersfeld / Germany
Tel.: +49.6621.950-0 · Fax: +49.6621.950-100

CENTRIFUGAL VENTILATING FANS
SERIES RZH – DOUBLE INLET DOUBLE WIDTH
ACCESSORIES

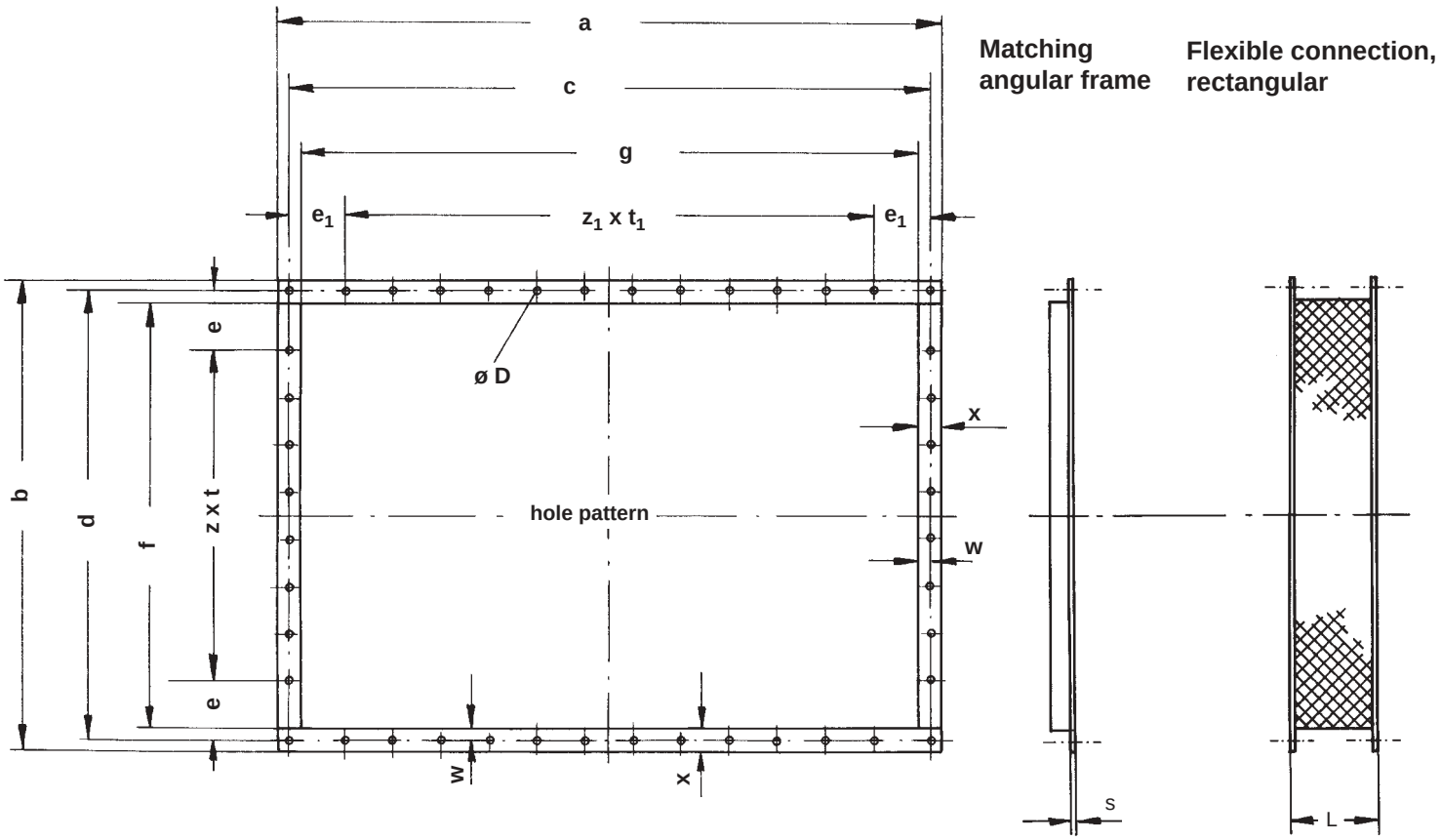

Size	a	c	g	z_1 x t_1	e_1	b	d	f	z x t	e	w	x	Ø D	s	L
400	582	546	502	3 x 125	85,5	582	546	502	3 x 125	85,5	22	40	12	4	130
450	642	606	562	3 x 125	115,5	642	606	562	3 x 125	115,5	22	40	12	4	130
500	712	676	632	3 x 125	150,5	712	676	632	3 x 125	150,5	22	40	12	4	130
560	792	756	712	5 x 125	65,5	792	756	712	5 x 125	65,5	22	40	12	4	130
630	882	846	802	5 x 125	110,5	882	846	802	5 x 125	110,5	22	40	12	4	130
710	982	946	902	5 x 125	160,5	982	946	902	5 x 125	160,5	22	40	12	4	130
800	1082	1046	1002	7 x 125	85,5	1082	1046	1002	7 x 125	85,5	22	40	12	4	130
900	1242	1192	1122	7 x 125	158,5	1242	1192	1122	7 x 125	158,5	35	60	12	6	130
1000	1372	1322	1252	9 x 125	98,5	1372	1322	1252	9 x 125	98,5	35	60	12	6	130
1120	1522	1472	1402	9 x 125	173,5	1122	1072	1002	7 x 125	98,5	35	60	12	6	200
1250	1722	1672	1602	11 x 125	148,5	1242	1192	1122	7 x 125	158,5	35	60	12	6	200
1400	1922	1872	1802	13 x 125	123,5	1372	1322	1252	9 x 125	98,5	35	60	12	6	200
1600	2122	2072	2002	15 x 125	98,5	1522	1472	1402	9 x 125	173,5	35	60	12	8	200

Dimensions in mm

TLT-Turbo GmbH
Am Weinberg 68 · D-36251 Bad Hersfeld / Germany
Tel.: +49.6621.950-0 · Fax: +49.6621.950-100

CENTRIFUGAL VENTILATING FANS DOUBLE INLET DOUBLE WIDTH CHARACTERISTICS CURVES RZH 400

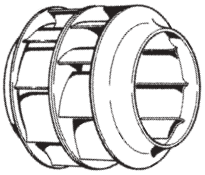

Max. adm. speed n = 3600 rpm
Moment of inertia J = 0.5 kgm²
Impeller diameter D_2 = 398 mm
Number of blades z = 9
Free discharge area F = 0.252 m²

No selection in this part
Fans with heavy-duty bearings ❽
Fans with light-duty bearings ❾

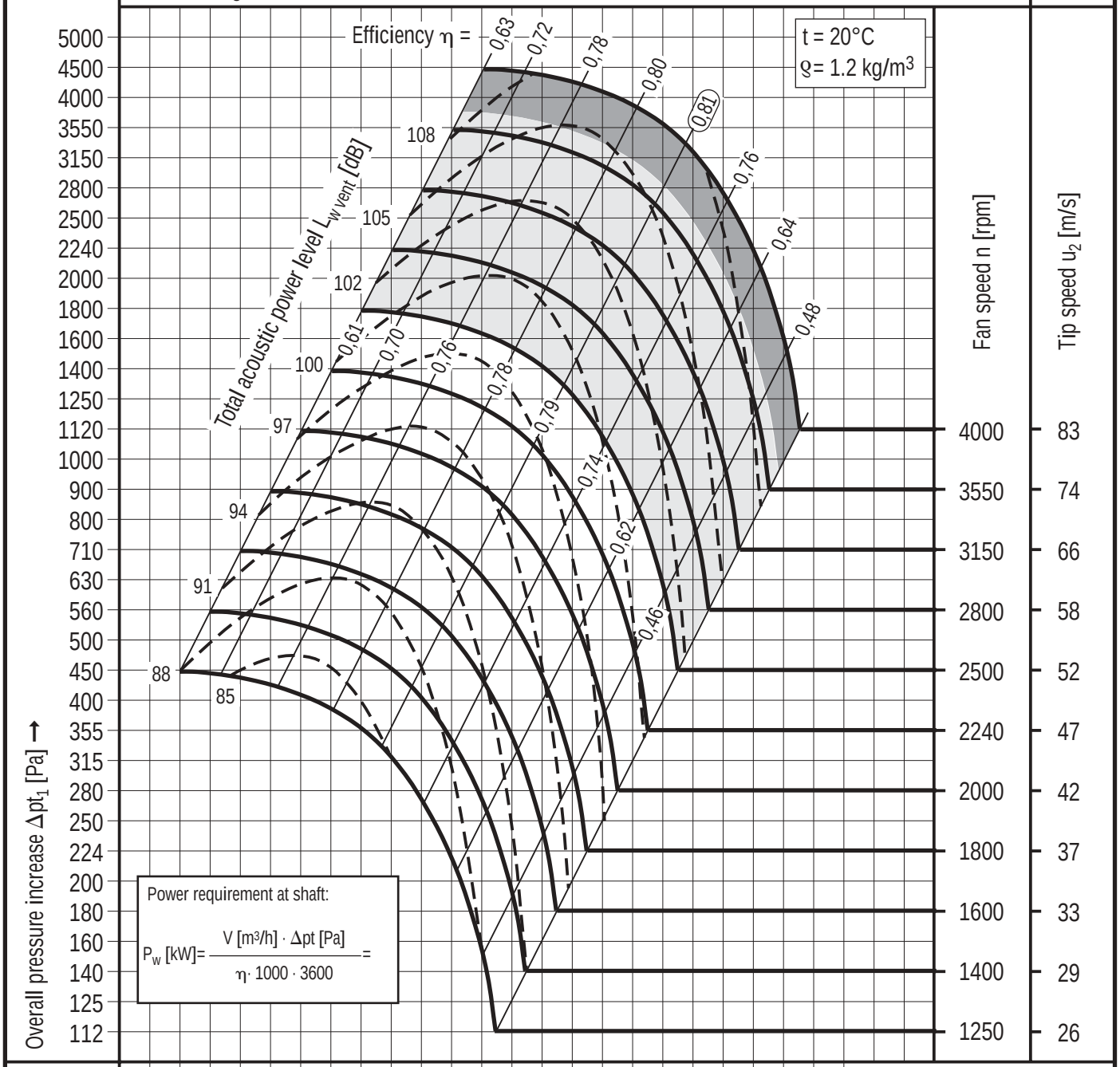

Volume flow rate* V [m³/h]	2 240	2 500	2 800	3 150	3 550	4 000	4 500	5 000	5 600	6 300	7 100	8 000	9 000	10 000	11 200	12 500	14 000	16 000	18 000	20 000	22 400	25 000	28 000	31 500
Volume flow rate* V [m³/s]	0,63	0,71	0,8	0,9	1,0	1,12	1,25	1,4	1,6	1,8	2,0	2,24	2,5	2,8	3,15	3,55	4,0	4,5	5,0	5,6	6,3	7,1	8,0	9,0
Flow velocity* c_2 [m/s]	2,5	2,8	3,15	3,55	4,0	4,5	5,0	5,6	6,3	7,1	8,0	9,0	10	11,2	12,5	14	16	18	20	22,4	25	28	31,5	35,5
Dynamic pressure* pd [Pa]	4,0	5,0	6,3	8,0	10	12,5	16	20	25	31,5	40	50	63	80	100	125	160	200	250	315	400	500	630	800

* Values rounded to standard figures

TLT-Turbo GmbH
Am Weinberg 68 · D-36251 Bad Hersfeld / Germany
Tel.: +49.6621.950-0 · Fax: +49.6621.950-100

CENTRIFUGAL VENTILATING FANS DOUBLE INLET DOUBLE WIDTH CHARACTERISTICS CURVES RZH 450

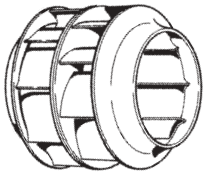

Max. adm. speed n = 3200 rpm
Moment of inertia J = 0.8 kgm²
Impeller diameter D_2 = 447 mm
Number of blades z = 9
Free discharge area F = 0.316 m²

No selection in this part
Fans with heavy-duty bearings ❽
Fans with light-duty bearings ❾

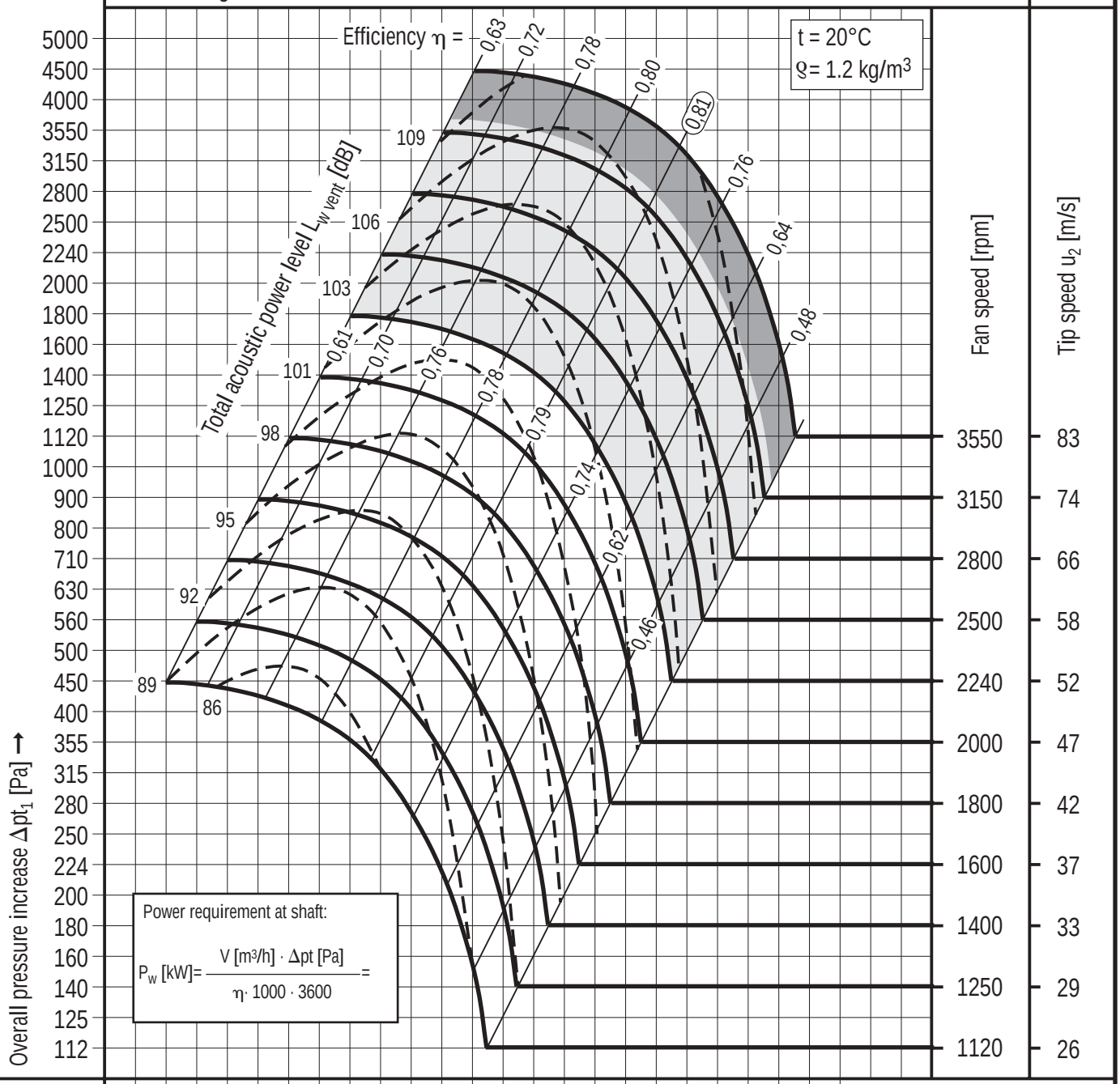

Volume flow rate* V [m³/h]	2 800	3 150	3 550	4 000	4 500	5 000	5 600	6 300	7 100	8 000	9 000	10 000	11 200	12 500	14 000	16 000	18 000	20 000	22 400	25 000	28 000	31 500	35 500	40 000	
Volume flow rate* V [m³/s]	0,8	0,9	1,0	1,12	1,25	1,4	1,6	1,8	2,0	2,24	2,5	2,8	3,15	3,55	4,0	4,5	5,0	5,6	6,3	7,1	8,0	9,0	10	11,2	
Flow velocity* c_2 [m/s]	2,5	2,8	3,15	3,55	4,0	4,5	5,0	5,6	6,3	7,1	8,0	9,0	10	11,2	12,5	14	16	18	20	22,4	25	28	31,5	35,5	
Dynamic pressure* pd [Pa]	4,0	5,0	6,3	8,0	10	12,5	16	20	25	31,5	40	50	63	80	100	125	160	200	250	315	400	500	630	800	

* Values rounded to standard figures

TLT-Turbo GmbH
Am Weinberg 68 · D-36251 Bad Hersfeld / Germany
Tel.: +49.6621.950-0 · Fax: +49.6621.950-100

CENTRIFUGAL VENTILATING FANS DOUBLE INLET DOUBLE WIDTH CHARACTERISTICS CURVES RZH 500

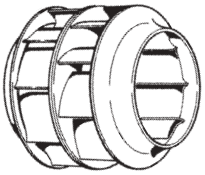

Max. adm. speed n = 2860 rpm
Moment of inertia J = 1.56 kgm²
Impeller diameter D_2 = 501 mm
Number of blades z = 9
Free discharge area F = 0.399 m²

No selection in this part
Fans with heavy-duty bearings ❽
Fans with light-duty bearings ❾

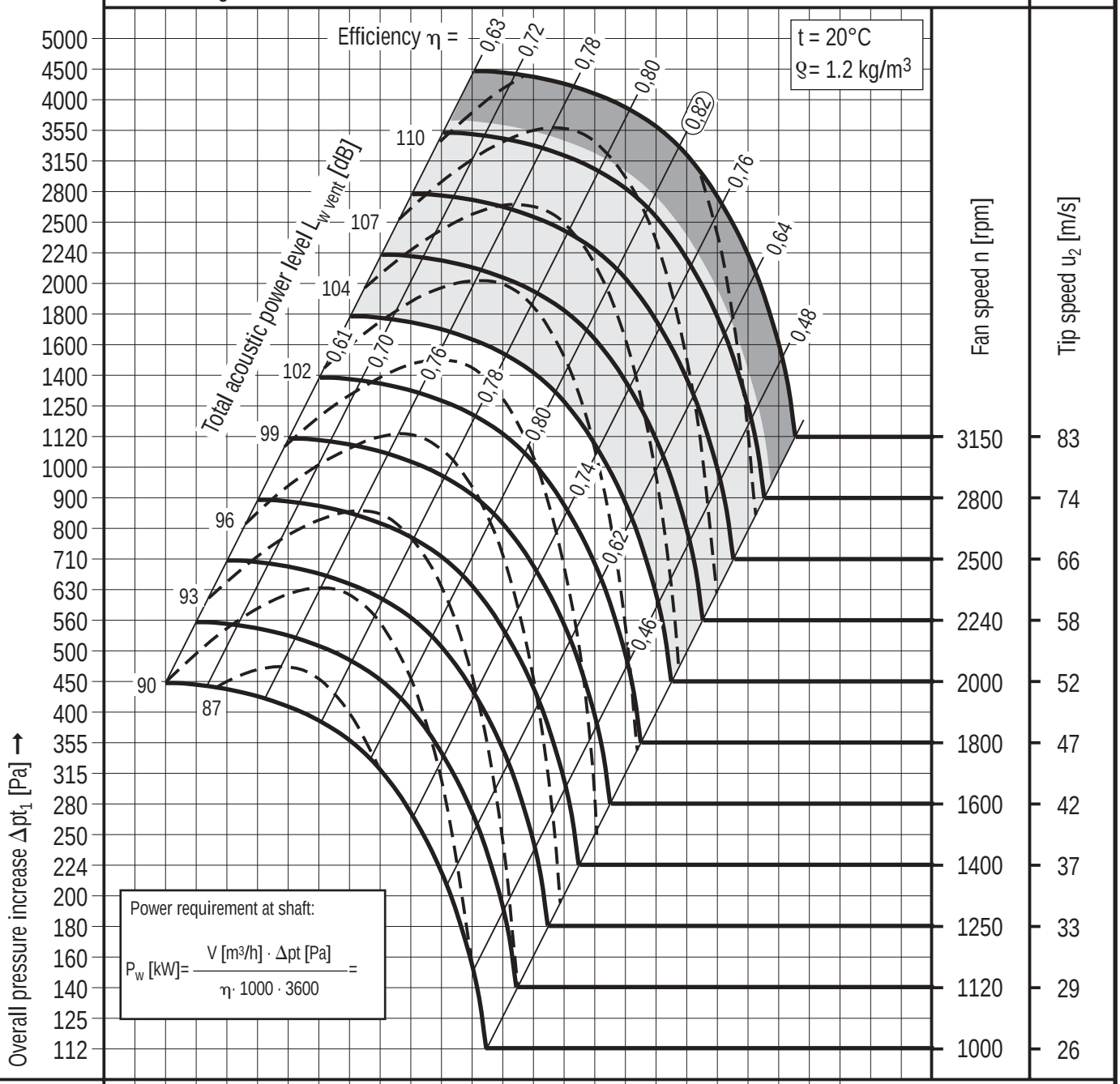

Volume flow rate* V [m³/h]	3 550	4 000	4 500	5 000	5 600	6 300	7 100	8 000	9 000	10 000	11 200	12 500	14 000	16 000	18 000	20 000	22 400	25 000	28 000	31 500	35 500	40 000	45 000	50 000			
Volume flow rate* V [m³/s]	1,0	1,12	1,25	1,4	1,6	1,8	2,0	2,24	2,5	2,8	3,15	3,55	4,0	4,5	5,0	5,6	6,3	7,1	8,0	9,0	10	11,2	12,5	14			
Flow velocity* c_2 [m/s]	2,5	2,8	3,15	3,55	4,0	4,5	5,0	5,6	6,3	7,1	8,0	9,0	10	11,2	12,5	14	16	18	20	22,4	25	28	31,5	35,5			
Dynamic pressure* pd [Pa]	4,0	5,0	6,3	8,0	10	12,5	16	20	25	31,5	40	50	63	80	100	125	160	200	250	315	400	500	630	800			

* Values rounded to standard figures

TLT-Turbo GmbH
Am Weinberg 68 · D-36251 Bad Hersfeld / Germany
Tel.: +49.6621.950-0 · Fax: +49.6621.950-100

CENTRIFUGAL VENTILATING FANS DOUBLE INLET DOUBLE WIDTH CHARACTERISTICS CURVES RZH 560

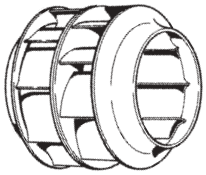

Max. adm. speed n = 2550 rpm
Moment of inertia J = 2.47 kgm²
Impeller diameter D_2 = 562 mm
Number of blades z = 9
Free discharge area F = 0.506 m²

No selection in this part
Fans with heavy-duty bearings ❽
Fans with light-duty bearings ❾

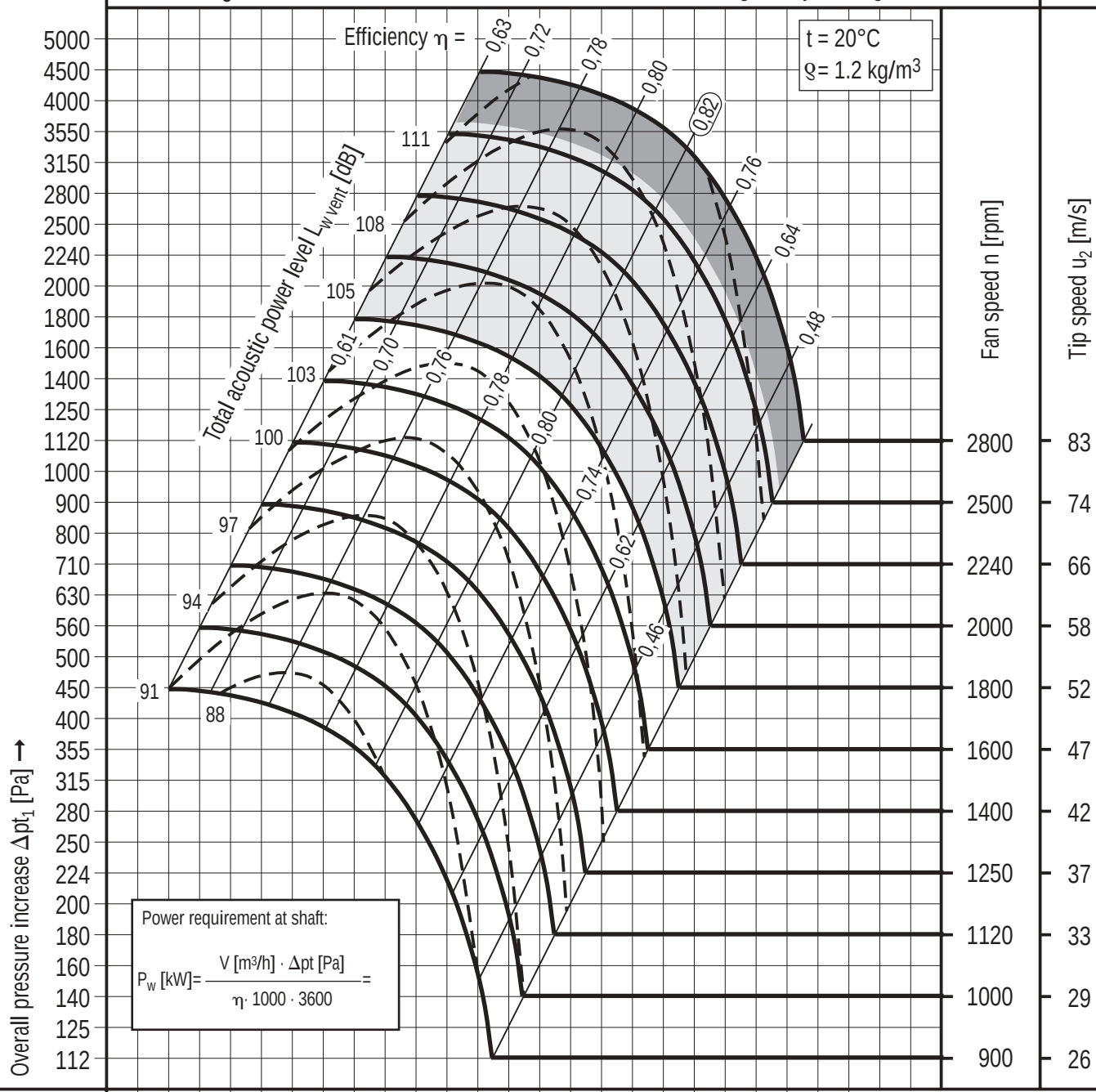

Volume flow rate* V [m³/h]	4 500	5 000	5 600	6 300	7 100	8 000	9 000	10 000	11 200	12 500	14 000	16 000	18 000	20 000	22 400	25 000	28 000	31 500	35 500	40 000	45 000	50 000	56 000	63 000	
Volume flow rate* V [m³/s]	1,25	1,4	1,6	1,8	2,0	2,24	2,5	2,8	3,15	3,55	4,0	4,5	5,0	5,6	6,3	7,1	8,0	9,0	10	11,2	12,5	14	16	18	
Flow velocity* c_2 [m/s]	2,5	2,8	3,15	3,55	4,0	4,5	5,0	5,6	6,3	7,1	8,0	9,0	10	11,2	12,5	14	16	18	20	22,4	25	28	31,5	35,5	
Dynamic pressure* pd [Pa]	4,0	5,0	6,3	8,0	10	12,5	16	20	25	31,5	40	50	63	80	100	125	160	200	250	315	400	500	630	800	

* Values rounded to standard figures

TLT-Turbo GmbH
Am Weinberg 68 · D-36251 Bad Hersfeld / Germany
Tel.: +49.6621.950-0 · Fax: +49.6621.950-100

CENTRIFUGAL VENTILATING FANS DOUBLE INLET DOUBLE WIDTH CHARACTERISTICS CURVES RZH 630

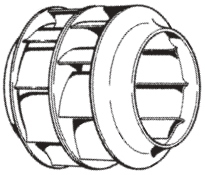

Max. adm. speed n = 2270 rpm
Moment of inertia J = 4.85 kgm²
Impeller diameter D_2 = 631 mm
Number of blades z = 9
Free discharge area F = 0.643 m²

No selection in this part
Fans with heavy-duty bearings ❽
Fans with light-duty bearings ❾

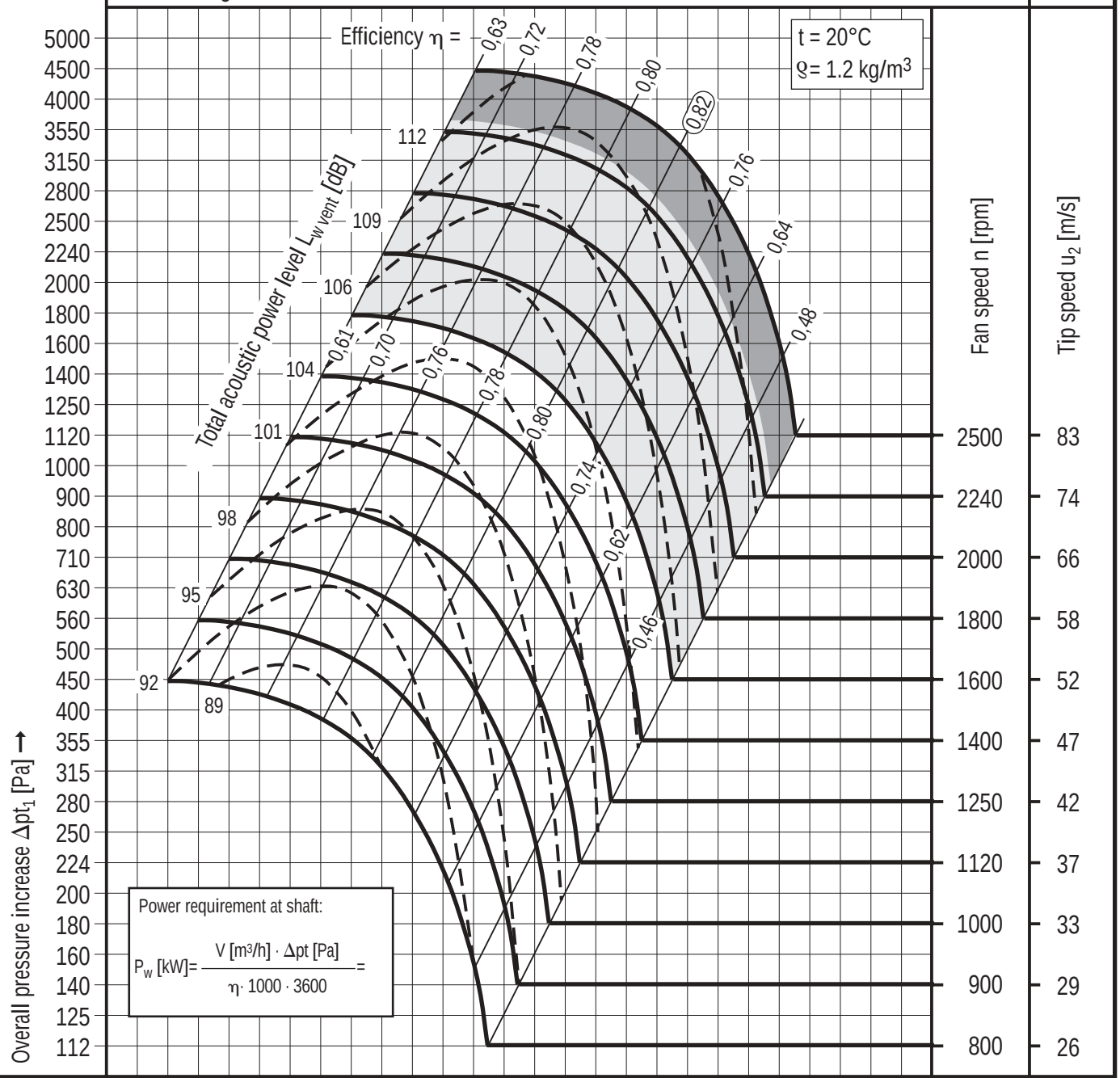

Volume flow rate* V [m³/h]	5 600	6 300	7 100	8 000	9 000	10 000	11 200	12 500	14 000	16 000	18 000	20 000	22 400	25 000	28 000	31 500	35 500	40 000	45 000	50 000	56 000	63 000	71 000	80 000			
Volume flow rate* V [m³/s]	1,6	1,8	2,0	2,24	2,5	2,8	3,15	3,55	4,0	4,5	5,0	5,6	6,3	7,1	8,0	9,0	10	11,2	12,5	14	16	18	20	22,4			
Flow velocity* c_2 [m/s]	2,5	2,8	3,15	3,55	4,0	4,5	5,0	5,6	6,3	7,1	8,0	9,0	10	11,2	12,5	14	16	18	20	22,4	25	28	31,5	35,5			
Dynamic pressure* pd [Pa]	4,0	5,0	6,3	8,0	10	12,5	16	20	25	31,5	40	50	63	80	100	125	160	200	250	315	400	500	630	800			

* Values rounded to standard figures

TLT-Turbo GmbH
Am Weinberg 68 · D-36251 Bad Hersfeld / Germany
Tel.: +49.6621.950-0 · Fax: +49.6621.950-100

CENTRIFUGAL VENTILATING FANS DOUBLE INLET DOUBLE WIDTH CHARACTERISTICS CURVES RZH 710

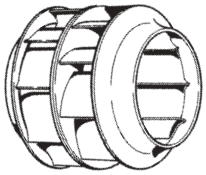

Max. adm. speed n = 1700 rpm
Moment of inertia J = 5.0 kgm²
Impeller diameter D_2 = 708 mm
Number of blades z = 9
Free discharge area F = 0.808 m²

No selection in this part
Fans with heavy-duty bearings ❽
Fans with light-duty bearings ❾

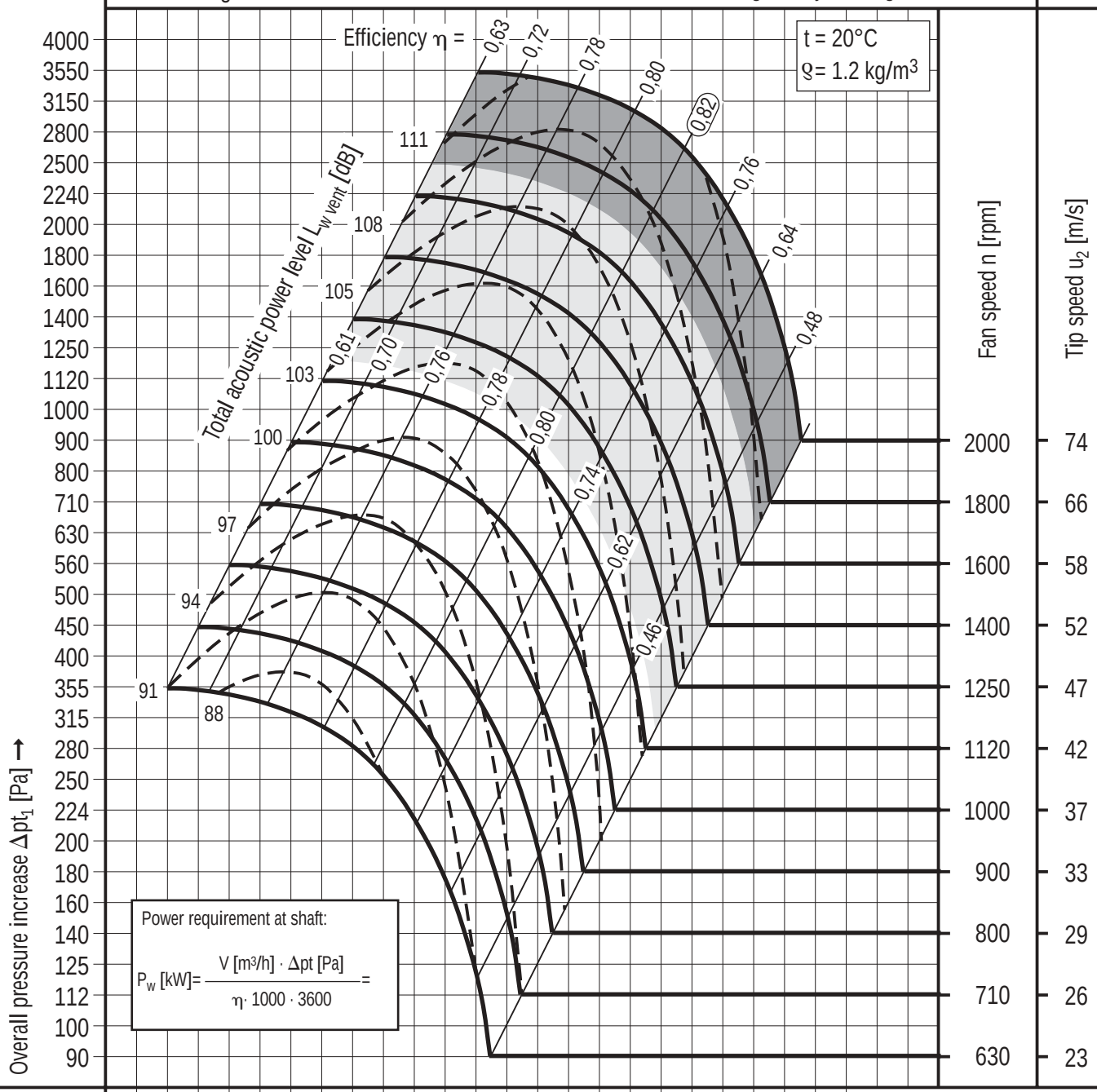

Volume flow rate* V [m³/h]	6 300	7 100	8 000	9 000	10 000	11 200	12 500	14 000	16 000	18 000	20 000	22 400	25 000	28 000	31 500	35 500	40 000	45 000	50 000	56 000	63 000	71 000	80 000	90 000	
Volume flow rate* V [m³/s]	1,8	2,0	2,24	2,5	2,8	3,15	3,55	4,0	4,5	5,0	5,6	6,3	7,1	8,0	9,0	10	11,2	12,5	14	16	18	20	22,4	25	
Flow velocity* c_2 [m/s]	2,24	2,5	2,8	3,15	3,55	4,0	4,5	5,0	5,6	6,3	7,1	8,0	9,0	10	11,2	12,5	14	16	18	20	22,4	25	28	31,5	
Dynamic pressure* pd [Pa]	3,15	4,0	5,0	6,3	8,0	10	12,5	16	20	25	31,5	40	50	63	80	100	125	160	200	250	315	400	500	630	

* Values rounded to standard figures

TLT-Turbo GmbH
Am Weinberg 68 · D-36251 Bad Hersfeld / Germany
Tel.: +49.6621.950-0 · Fax: +49.6621.950-100

CENTRIFUGAL VENTILATING FANS DOUBLE INLET DOUBLE WIDTH CHARACTERISTICS CURVES RZH 800

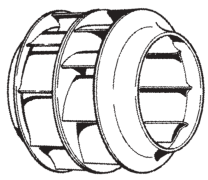

Max. adm. speed n = 1500 rpm
Moment of inertia J = 10.3 kgm^2
Impeller diameter D_2 = 794 mm
Number of blades z = 9
Free discharge area F = 0.98 m^2

No selection in this part
Fans with heavy-duty bearings ❽
Fans with light-duty bearings ❾

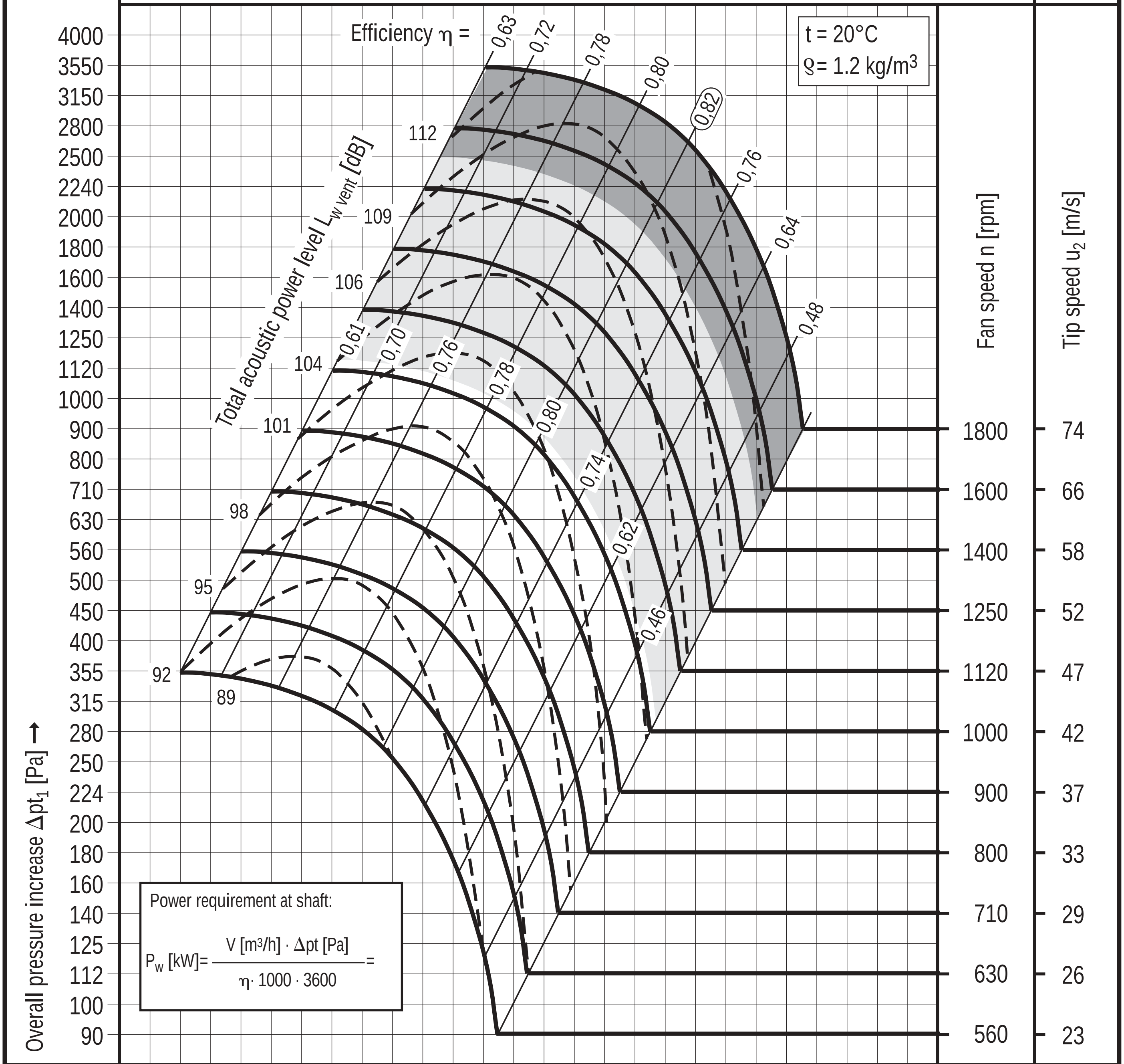

Volume flow rate* V [m^3/h]	Volume flow rate* V [m^3/s]	Flow velocity* c_2 [m/s]	Dynamic pressure* pd [Pa]
8 000	2,24	2,24	3,15
9 000	2,5	2,5	4,0
10 000	2,8	2,8	5,0
11 200	3,15	3,15	6,3
12 500	3,55	3,55	8,0
14 000	4,0	4,0	10
16 000	4,5	4,5	12,5
18 000	5,0	5,0	16
20 000	5,6	5,6	20
22 400	6,3	6,3	25
25 000	7,1	7,1	31,5
28 000	8,0	8,0	40
31 500	9,0	9,0	50
35 500	10	10	63
40 000	11,2	11,2	80
45 000	12,5	12,5	100
50 000	14	14	125
56 000	16	16	160
63 000	18	18	200
71 000	20	20	250
80 000	22,4	22,4	315
90 000	25	25	400
100 000	28	28	500
112 000	31,5	31,5	630

* Values rounded to standard figures

RZH-Characteristics Curves

TLT-Turbo GmbH
Am Weinberg 68 · D-36251 Bad Hersfeld/Germany
Tel.: +49.6621.950-0 · Fax: +49.6621.950-100

CENTRIFUGAL VENTILATING FANS DOUBLE INLET DOUBLE WIDTH CHARACTERISTICS CURVES RZH 900

Max. adm. speed	n = 1340 rpm
Moment of inertia	J = 21 kgm²
Impeller diameter	D_2 = 891 mm
Number of blades	z = 9
Free discharge area	F = 1.25 m²

- No selection in this part
- Fans with heavy-duty bearings ❽
- Fans with light-duty bearings ❾

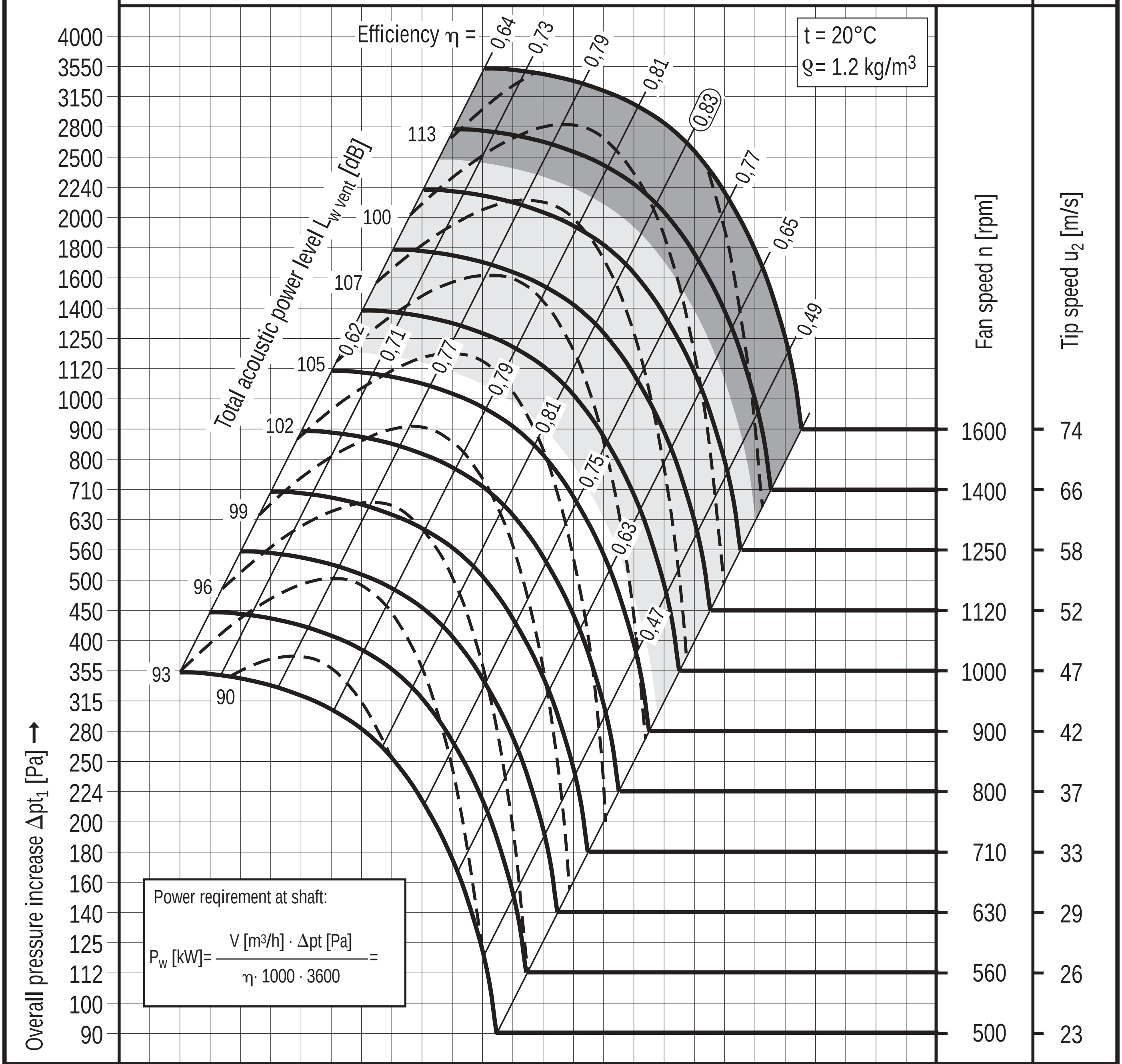

Volume flow rate* V [m³/h]	Volume flow rate* V [m³/s]	Flow velocity* c_2 [m/s]	Dynamic pressure* pd [Pa]
10 000	2,8	2,24	3,15
11 200	3,15	2,5	4,0
12 500	3,55	2,8	5,0
14 000	4,0	3,15	6,3
16 000	4,5	3,55	8,0
18 000	5,0	4,0	10
20 000	5,6	4,5	12,5
22 400	6,3	5,0	16
25 000	7,1	5,6	20
28 000	8,0	6,3	25
31 500	9,0	7,1	31,5
35 500	10	8,0	40
40 000	11,2	9,0	50
45 000	12,5	10	63
50 000	14	11,2	80
56 000	16	12,5	100
63 000	18	14	125
71 000	20	16	160
80 000	22,4	18	200
90 000	25	20	250
100 000	28	22,4	315
112 000	31,5	25	400
125 000	35,5	28	500
140 000	40	31,5	630

* Values rounded to standard figures

TLT-Turbo GmbH
Am Weinberg 68 · D-36251 Bad Hersfeld / Germany
Tel.: +49.6621.950-0 · Fax: +49.6621.950-100

CENTRIFUGAL VENTILATING FANS DOUBLE INLET DOUBLE WIDTH CHARACTERISTICS CURVES RZH 1000

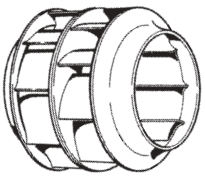

Max. adm. speed n = 1180 rpm
Moment of inertia J = 33 kgm²
Impeller diameter D_2 = 1000 mm
Number of blades z = 9
Free discharge area F = 1.56 m²

No selection in this part
Fans with heavy-duty bearings ❽
Fans with light-duty bearings ❾

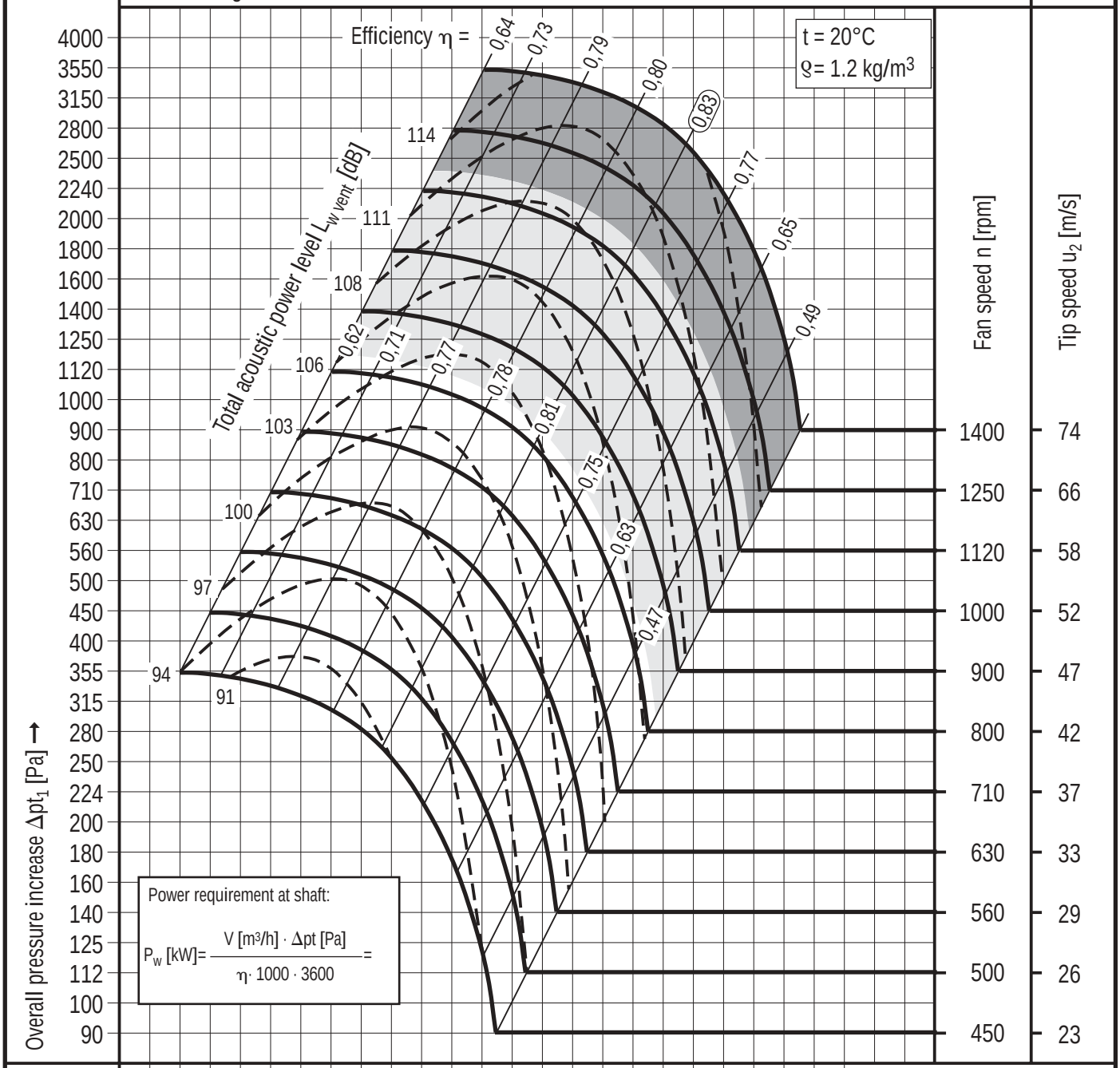

Volume flow rate* V [m³/h]	12 500	14 000	16 000	18 000	20 000	22 400	25 000	28 000	31 500	35 500	40 000	45 000	50 000	56 000	63 000	71 000	80 000	90 000	100 000	112 000	125 000	140 000	160 000	180 000			
Volume flow rate* V [m³/s]	3,55	4,0	4,5	5,0	5,6	6,3	7,1	8,0	9,0	10	11,2	12,5	14	16	18	20	22,4	25	28	31,5	35,5	40	45	50			
Flow velocity* c_2 [m/s]	3,55	2,5	2,8	3,15	3,55	4,0	4,5	5,0	5,6	6,3	7,1	8,0	9,0	10	11,2	12,5	14	16	18	20	22,4	25	28	31,5			
Dynamic pressure* pd [Pa]	3,15	4,0	5,0	6,3	8,0	10	12,5	16	20	25	31,5	40	50	63	80	100	125	160	200	250	315	400	500	630			

* Values rounded to standard figures

TLT-Turbo GmbH
Am Weinberg 68 · D-36251 Bad Hersfeld/Germany
Tel.: +49.6621.950-0 · Fax: +49.6621.950-100

CENTRIFUGAL VENTILATING FANS DOUBLE INLET DOUBLE WIDTH CHARACTERISTICS CURVES RZH 1120

Max. adm. speed n = 1120 rpm
Moment of inertia J = 47 kgm²
Impeller diameter D_2 = 1120 mm
Number of blades z = 8
Free discharge area F = 1.4 m²

No selection in this part

Fans with heavy-duty bearings ❽

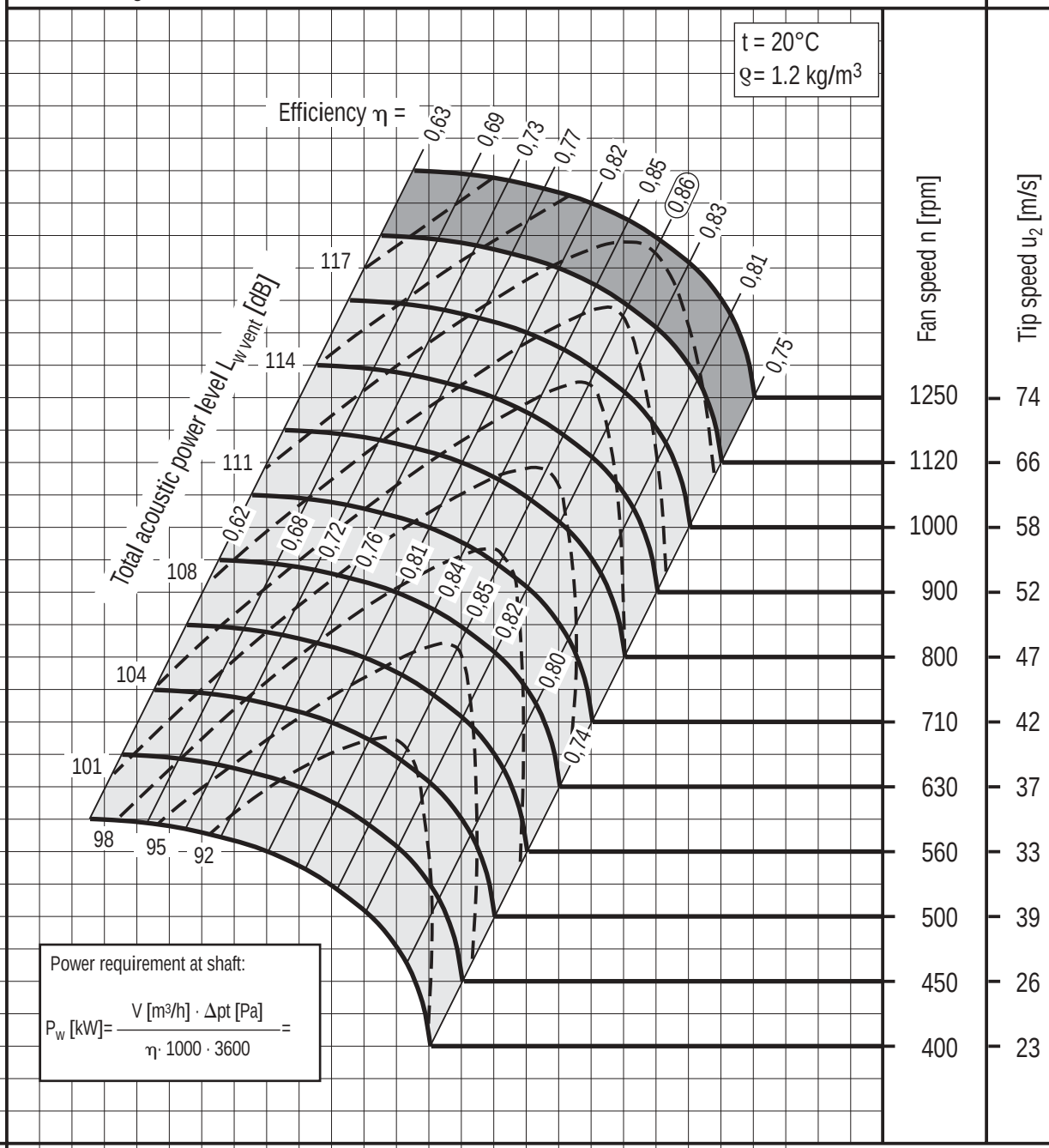

Volume flow rate* V [m³/h]	12 500	14 000	16 000	18 000	20 000	22 400	25 000	28 000	31 500	35 500	40 000	45 000	50 000	56 000	63 000	71 000	80 000	90 000	100 000	112 000	125 000	140 000	160 000	180 000
Volume flow rate* V [m³/s]	3,55	4,0	4,5	5,0	5,6	6,3	7,1	8,0	9,0	10	11,2	12,5	14	16	18	20	22,4	25	28	31,5	35,5	40	45	50
Flow velocity* c_2 [m/s]	2,5	2,8	3,15	3,55	4,0	4,5	5,0	5,6	6,3	7,1	8,0	9,0	10	11,2	12,5	14	16	18	20	22,4	25	28	31,5	35,5
Dynamic pressure* pd [Pa]	3,55	4,5	5,6	7,1	9,0	11,2	14	18	22,4	28	35,5	45	56	71	90	112	140	180	224	280	355	450	560	710

* Values rounded to standard figures

TLT-Turbo GmbH
Am Weinberg 68 · D-36251 Bad Hersfeld / Germany
Tel.: +49.6621.950-0 · Fax: +49.6621.950-100

CENTRIFUGAL VENTILATING FANS DOUBLE INLET DOUBLE WIDTH CHARACTERISTICS CURVES RZH 1250

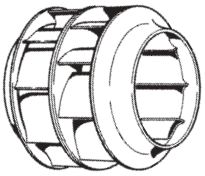

Max. adm. speed n = 1000 rpm
Moment of inertia J = 89 kgm²
Impeller diameter D_2 = 1250 mm
Number of blades z = 8
Free discharge area F = 1.8 m²

No selection in this part

Fans with heavy-duty bearings ❽

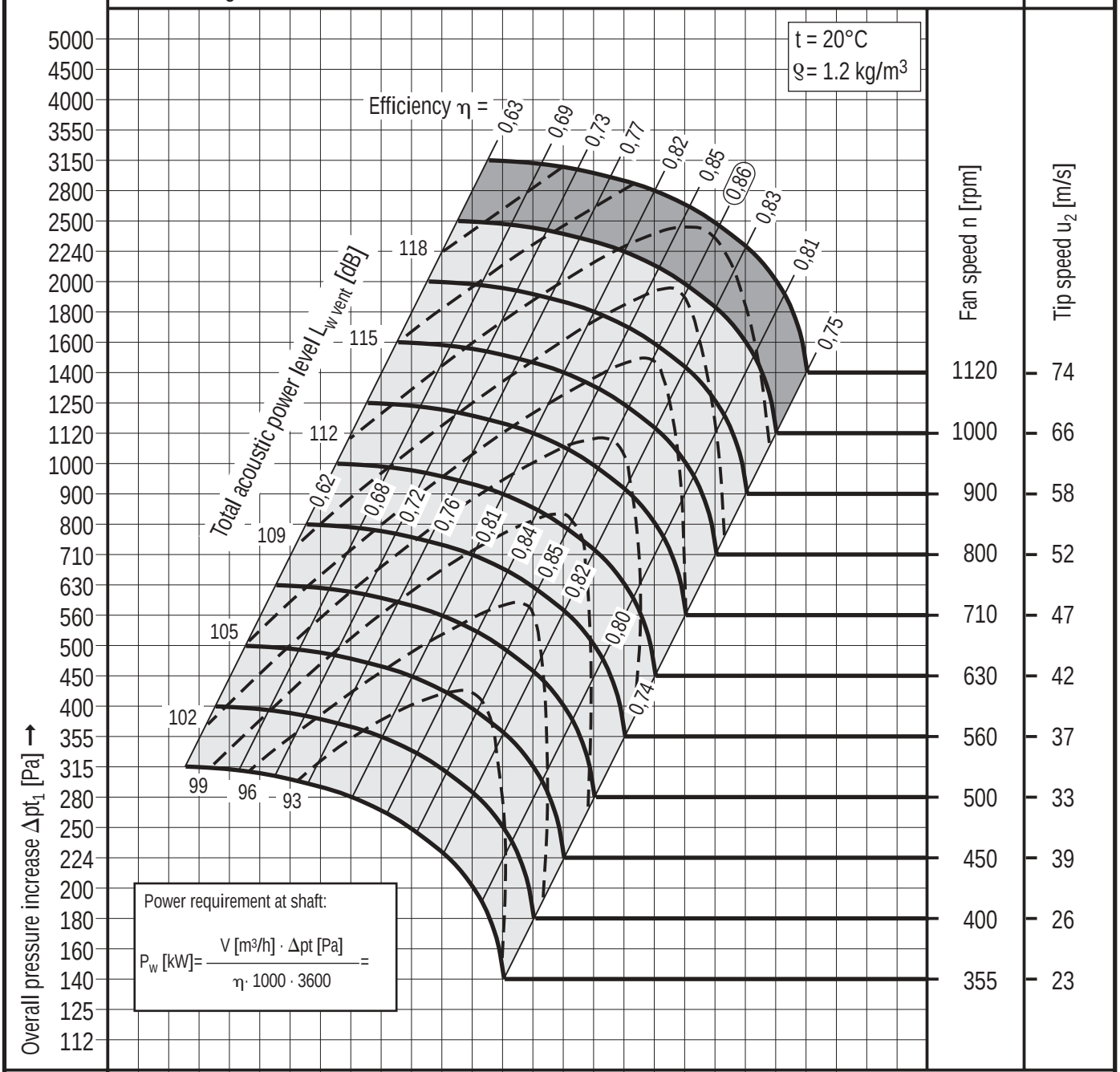

Volume flow rate* V [m³/h]	16 000	18 000	20 000	22 400	25 000	28 000	31 500	35 500	40 000	45 000	50 000	56 000	63 000	71 000	80 000	90 000	100 000	112 000	125 000	140 000	160 000	180 000	200 000	224 000	
Volume flow rate* V [m³/s]	4,5	5,0	5,6	6,3	7,1	8,0	9,0	10	11,2	12,5	14	16	18	20	22,4	25	28	31,5	35,5	40	45	50	56	63	
Flow velocity* c_2 [m/s]	2,5	2,8	3,15	3,55	4,0	4,5	5,0	5,6	6,3	7,1	8,0	9,0	10	11,2	12,5	14	16	18	20	22,4	25	28	31,5	35,5	
Dynamic pressure* pd [Pa]	3,55	4,5	5,6	7,1	9,0	11,2	14	18	22,4	28	35,5	45	56	71	90	112	140	180	224	280	355	450	560	710	

* Values rounded to standard figures

TLT-Turbo GmbH
Am Weinberg 68 · D-36251 Bad Hersfeld/Germany
Tel.: +49.6621.950-0 · Fax: +49.6621.950-100

CENTRIFUGAL VENTILATING FANS DOUBLE INLET DOUBLE WIDTH CHARACTERISTICS CURVES RZH 1400

Max. adm. speed n = 900 rpm
Moment of inertia J = 155 kgm²
Impeller diameter D_2 = 1400 mm
Number of blades z = 8
Free discharge area F = 2.26 m²

No selection in this part

Fans with heavy-duty bearings ❽

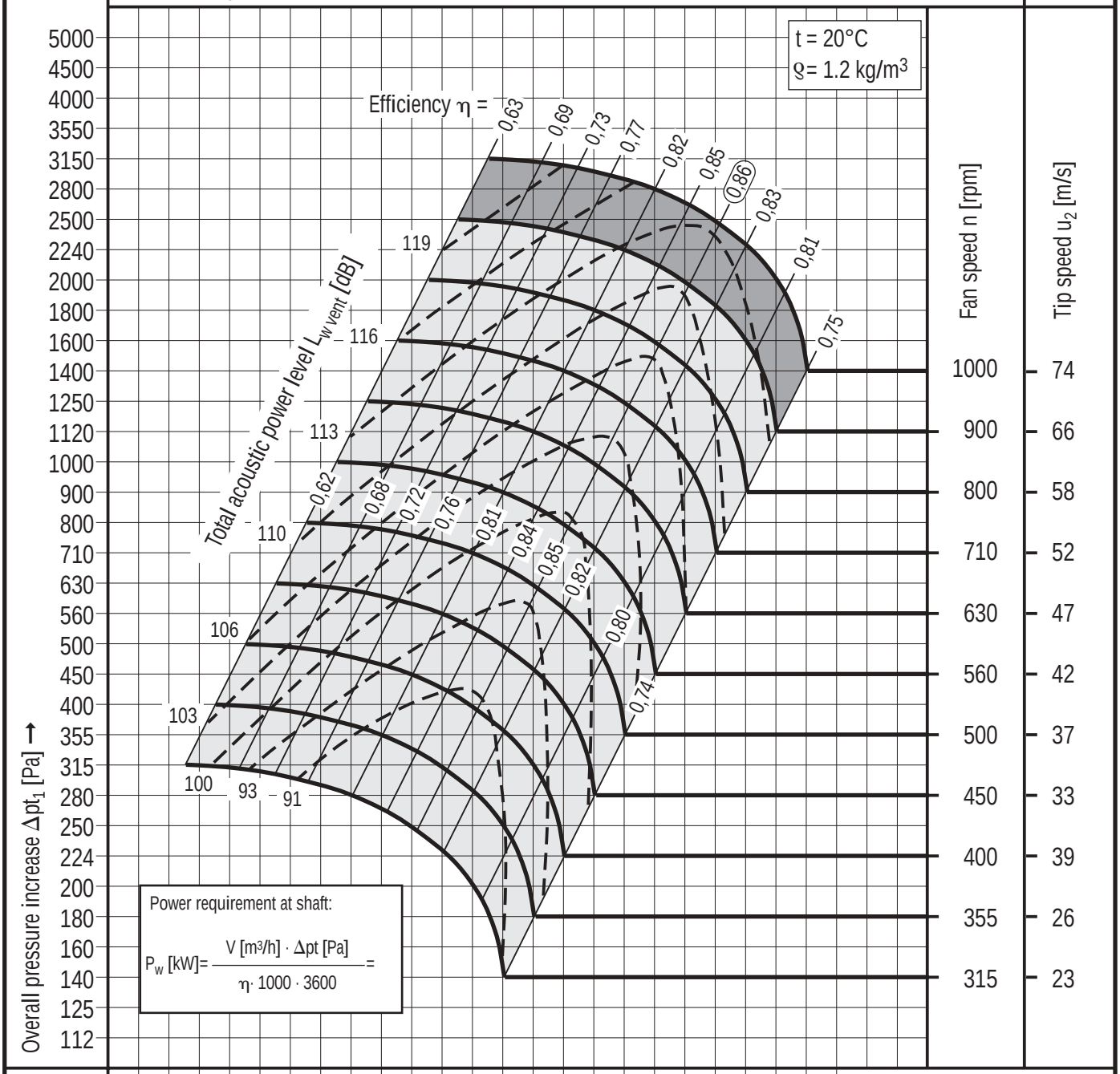

Volume flow rate* V [m³/h]	20 000	22 400	25 000	28 000	31 500	35 500	40 000	45 000	50 000	56 000	63 000	71 000	80 000	90 000	100 000	112 000	125 000	140 000	160 000	180 000	200 000	224 000	250 000	280 000
Volume flow rate* V [m³/s]	5,6	6,3	7,1	8,0	9,0	10	11,2	12,5	14	16	18	20	22,4	25	28	31,5	35,5	40	45	50	56	63	71	80
Flow velocity* c_2 [m/s]	2,5	2,8	3,15	3,55	4,0	4,5	5,0	5,6	6,3	7,1	8,0	9,0	10	11,2	12,5	14	16	18	20	22,4	25	28	31,5	35,5
Dynamic pressure* pd [Pa]	3,55	4,5	5,6	7,1	9,0	11,2	14	18	22,4	28	35,5	45	56	71	90	112	140	180	224	280	355	450	560	710

* Values rounded to standard figures

TLT-Turbo GmbH
Am Weinberg 68 · D-36251 Bad Hersfeld / Germany
Tel.: +49.6621.950-0 · Fax: +49.6621.950-100

CENTRIFUGAL VENTILATING FANS DOUBLE INLET DOUBLE WIDTH CHARACTERISTICS CURVES RZH 1600

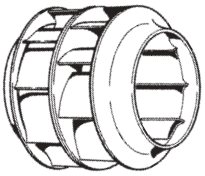

Max. adm. speed n = 800 rpm
Moment of inertia J = 246 kgm²
Impeller diameter D_2 = 1600 mm
Number of blades z = 8
Free discharge area F = 2.81 m²

No selection in this part

Fans with heavy-duty bearings ❽

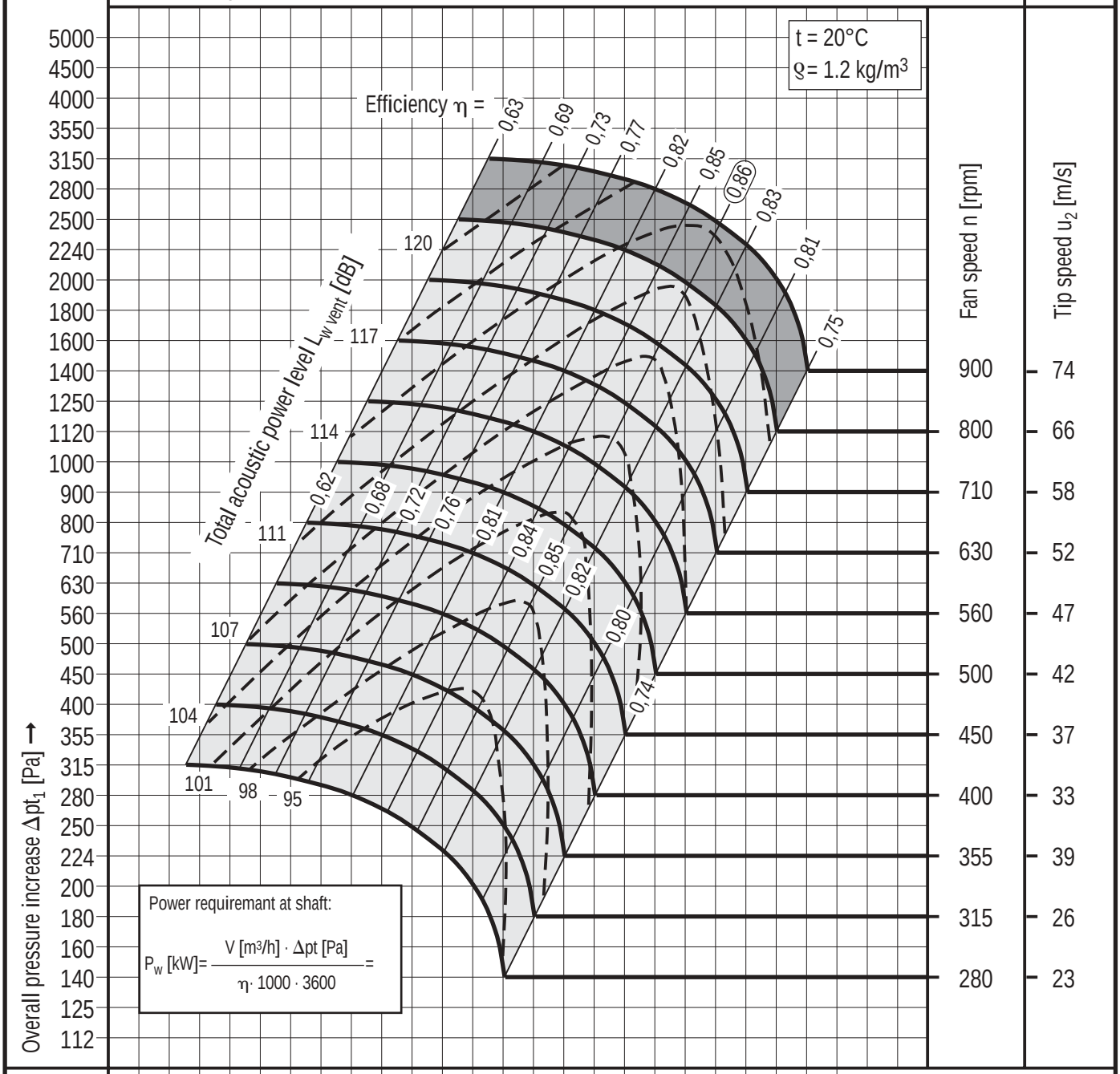

Volume flow rate* V [m³/h]	25 000	28 000	31 500	35 500	40 000	45 000	50 000	56 000	63 000	71 000	80 000	90 000	100 000	112 000	125 000	140 000	160 000	180 000	200 000	224 000	250 000	280 000	315 000	355 000	
Volume flow rate* V [m³/s]	7,1	8,0	9,0	10	11,2	12,5	14	16	18	20	22,4	25	28	31,5	35,5	40	45	50	56	63	71	80	90	100	
Flow velocity* c_2 [m/s]	2,5	2,8	3,15	3,55	4,0	4,5	5,0	5,6	6,3	7,1	8,0	9,0	10	11,2	12,5	14	16	18	20	22,4	25	28	31,5	35,5	
Dynamic pressure* pd [Pa]	3,55	4,5	5,6	7,1	9,0	11,2	14	18	22,4	28	35,5	45	56	71	90	112	140	180	224	280	355	450	560	710	

* Values rounded to standard figures

Item No.	Qty.	Description	Unit price EUR	Unit price Cts	Total EUR	Total Cts
		Carryover				
		Centrifugal Ventilating Fan (Size 400 – 1000) **RZH Series, Double Inlet Double Width** **V-belt driven** – Impeller made of sheet steel, welded construction, with backward curved blades, surface finished with a protective polyester powder coating, colour RAL 7030 – Impeller assembly (impeller, grey cast iron screw-on hub with taperlock steel clamping bush, true-running shaft) statically and dynamically balanced in assembled state, minimum balance quality Q 2.5 per VDI 2060 – Both shaft ends with keyway and parallel key per DIN 6885/1, shaft with protective Tectyl coating – Bearing configuration: • Deep-groove ball bearing (re-greasable), non-split RASE type,maintenance free low-noise design rated for a service life of approx. 20000 operating hours, mounted on a sturdy bearing pedestal or • Self-aligning ball or roller bearing (re-greasable when stationary, or in service via a suitable greasing system), supported in a split cast-iron pillow block, rated for a calculated service life of approx. 30000 operating hours, mounted on a sturdy bearing pedestal. – Outlet frame as per DIN 24193/2 (Euro standard) – Spiral-type fan casing, welded construction with rugged reinforcing frame and bolt-on baseframe sections, surface finished with a protective 1-component synthetic paint coating, colour RAL 7030 (stone grey) **Specifications:** Volume flow rate — m^3/h Temperature — °C Overall pressure increase — Pa Dynamic pressure — Pa Fan speed — rpm Efficiency — % Power requirement at shaft — kW Total acoustic power level — dB Motor output — kW Motor speed — rpm Motor current rating — A Voltage — Volt Frequency — Hz Weight — kg **Manufacturer: TLT-Turbo GmbH** **Type: RZH ……** **For accessories see tender texts on page 066.**				
		Carryover				

Item No.	Qty.	Description	Unit price EUR	Unit price Cts	Total EUR	Total Cts
		Carryover				
		Centrifugal Ventilating Fan (Size 1120 – 1600) **RZH Series, Double Inlet Double Width** **V-belt driven** – Impeller made of sheet steel, welded construction, with backward curved blades, surface finished with a protective synthetic coating, colour RAL 7030 – Impeller assembly (impeller, grey cast iron weld-in hub with taperlock steel clamping bush, true-running shaft) statically and dynamically balanced in assembled state, minimum balance quality Q 2.5 per VDI 2060 – Both shaft ends with keyway and parallel key per DIN 6885/1, shaft with protective Tectyl coating – Bearing configuration: Self-aligning ball or roller bearing (re-greasable when stationary, or in service via a suitable greasing system), supported in a split cast-iron pillow block, rated for a calculated service life of approx. 30000 operating hours, mounted on a sturdy bearing pedestal. – Outlet frame per DIN 24193/2 (Euro standard) and frame base structure integrated into the casing – Fan casing, sturdy welded construction, split in one or two planes, casing sidewalls with reinforcing grating, finished with 1-component synthetic paint coating, colour RAL 7030 (stone grey) **Specifications:** Volume flow rate m^3/h Temperature °C Overall pressure increase Pa Dynamic pressure Pa Fan speed rpm Efficiency % Power requirement at shaft kW Total acoustic power level dB Motor output kW Motor speed rpm Motor current rating A Voltage Volt Frequency Hz Weight kg **Manufacturer: TLT-Turbo GmbH** **Type: RZH ……** **For accessories see tender texts on page 066.**				
		Carryover				

Item No.	Qty.	Description	Unit price EUR	Unit price Cts	Total EUR	Total Cts
		Carryover				
		Accessories for belt-driven RZH centrifugal fans				
		– Baseframe made of torsion-resistant sectional steel, ready for fan and motor installation, with belt tensioning device				
		– Matching flange (outlet side)				
		– Flexible connection (outlet side				
		– Inspection hatch				
		– Inspection hatch, industrial type				
		– Condensate drain				
		– Vibration isolator set (spring or rubber type)				
		– Inlet guard, in 2 parts				
		– Shaft guard				
		– V-belt drive				
		– V-belt guard (fully enclosed)				
		– Lubrication line				
		– Enhanced spark protection				
		– RPM sensor orifice in belt guard casing				
		– Three-phase a.c. motor, ICE standard series, foot-mounted type, protection class IP ____				
		Carryover				

TLT-Turbo GmbH
Am Weinberg 68 · D-36251 Bad Hersfeld / Germany
Tel.: +49.6621.950-0 · Fax: +49.6621.950-100

CENTRIFUGAL VENTILATING FANS
EXAMPLES FROM OUR PRODUCT RANGE

Single Inlet Single Width centrifugal fan
REH 1000 – R38 – RD0°- AR

Double Inlet Double Width centrifugal fan
RZH 710 – R38 – LG90° - AR

Double Inlet Double Width centrifugal fan
RZH 1250 – R39 – RD180° – AL, galvanized

Single Inlet Single Width centrifugal fan
REH 450 – M – LG0°

Single Inlet Single Width centrifugal fan
REH 1250 – R38 –RD270° - AR

Smoke exhaust Single Inlet Single Width centrifugal fan,
BV-REH 560 – R 39 - RD0° - AR with thermal and noise insulation

TLT-Turbo GmbH

Am Weinberg 68
36251 Bad Hersfeld / Germany

Phone: + 49.6621.950-0
Fax: + 49.6621.950-100

E-mail: serie@tlt.de
Website: www.tlt.de

© 2003 - TLT-Turbo GmbH · 5th edition 06.03 / 1.0 / H · Subject to errors and modifications.